Tag Performance Parameters and Test Methods

Version 1.1.3

Approved by the EPCglobal Technical Steering Committee
and EPCglobal Business Steering Committee
June 30, 2008

Contents

Foreword

This document contains performance metrics and means for testing these metrics for a Class-1 radio-frequency identification (RFID) Tag compliant with the *EPCglobal™ Class-1 Generation-2 UHF RFID Protocol for Communications at 860 MHz – 960 MHz* (**the Protocol**). This document is intended to serve the industry by providing a systematic means for evaluating Tags and ultimately optimizing performance in the field.

Introduction

The performance characteristics of Tag and Reader devices may vary drastically due to application factors as well as the particulars of the RF air interface (frequency, modulation, inventory algorithm, etc.). Of key concern is the matching of the various performance characteristics to the user application. Additionally, in an open environment users of RFID technology demand multiple sources for these devices from technology providers. A key challenge is a method of evaluating the differences between various technology providers' products in a consistent and equitable manner.

This document specifies the Tag performance metrics and procedures for measuring them. Tags are passive-backscatter devices and operate within an Interrogator-talks-first, radio-frequency identification (RFID) system operating in the 860 MHz – 960 MHz frequency range. The system comprises Readers, also known as Interrogators, and Tags, also known as Labels. The active component of a Tag is the Tag Integrated Circuit (IC) which determines all of the functional properties of the Tag as well as many of its performance parameters.

A Reader transmits information to a Tag by modulating an RF signal in the 860 MHz – 960 MHz frequency range. The Tag receives both information and operating energy from this RF signal. Tags are passive, meaning that they receive all of their operating energy from the Interrogator's RF waveform.

A Reader receives information from a Tag by transmitting a continuous-wave (CW) RF signal to the Tag and the Tag responds by modulating the reflection coefficient of its antenna, thereby backscattering an information signal to the Reader. The system is Interrogator-Talks-First, meaning that a Tag modulates its antenna reflection coefficient with an information signal only after being directed to do so by the Reader.

Readers and Tags are not required to talk simultaneously; rather, communications are half-duplex, meaning that Readers talk and Tags listen, or vice versa.

Various air interface modulation and coding schemes are permitted by the Protocol. The Reader-to-Tag link is called the forward link and the Tag-to-Reader link is called the reverse link. The Reader selects the modulation and coding schemes for both links.

1. Scope

This document specifies a common set of Tag parameters that can be used to evaluate and compare Tags from multiple vendors and across product lines within a vendor. These parameters are listed in Table 4-1. Tag parameters fall in three categories:

1. Descriptive parameters that describe Tag features. Examples are manufacturer, model number, and size.
2. Operational limitation parameters that indicate extreme operational ratings. Examples are maximum RF input power, operating temperature range, and Electrostatic Discharge (ESD) level.
3. Performance metrics that contribute to the system performance in the field. Examples are read and write range, orientation sensitivity, and tolerance to RF interference.

Capabilities for each of the Tag parameter categories are discerned separately. Means for collecting capabilities are respectively:

1. Tag vendor provides list of standard features.
2. Tag or IC vendor tests and/or analyzes operational limitations using techniques commonly adopted in the industry and provides values.
3. Testing laboratory tests performance metrics using the methods specified in this document.

Methods for testing performance metrics are defined in this document to the level necessary to provide repeatable results from independent test laboratories. The set of performance parameters chosen is not exhaustive but represents the primary parameters that influence fielded system performance.

Performance parameters are expressed in terms of a common and limited set of units. These units are distance, percent and duration. Standardizing on these units provides an intuitive link to physical properties that we all understand. For those interested in translations to power levels and field strengths, Annex A provides the conversion expressions.

It is not the intent of this document to dictate specific test equipment or a test environment. Instead, test system requirements are provided that, if satisfied, assure accurate measurement results. Test system requirements include test equipment accuracies, physical dimensions of the test setup, RF environmental requirements, and calibration procedures.

This document also specifies reporting guidelines where test conditions and results are listed. A summary of the test reports from all tests form a standardized Tag datasheet (see Table 4-1).

This document does not specify parameters or methods used to test regulatory parameters such as spurious emissions or transmit power. It is assumed that these parameters are addressed by appropriate regulatory certification testing.

This document does not specify detailed physical layer parameters (timing, wave shapes, etc.) or Protocol functional parameters (state diagram, command responses, etc.). These parameters are addressed by the EPCglobal conformance and interoperability test programs.

2. Normative references

The following referenced documents are indispensable to the application of this document. For dated references, only the edition cited applies. For undated references, the latest edition (including any amendments) applies.

EPCglobal™: EPC™ Radio-Frequency Identity Protocols, Class-1 Generation-2 UHF RFID, Protocol for Communications at 860 MHz – 960 MHz, Version 1.1.0

EPCglobal™: EPC™ Tag Data Standards

EPCglobal™ (2004): FMCG RFID Physical Requirements Document (draft)

EPCglobal™ (2004): Class-1 Generation-2 UHF RFID Implementation Reference (draft)

European Telecommunications Standards Institute (ETSI), EN 300 220 (all parts): *Electromagnetic compatibility*

and Radio spectrum Matters (ERM); Short Range Devices (SRD); Radio equipment to be used in the 25 MHz to 1000 MHz frequency range with power levels ranging up to 500 mW

European Telecommunications Standards Institute (ETSI), EN 302 208: *Electromagnetic compatibility and radio spectrum matters (ERM) – Radio-frequency identification equipment operating in the band 865 MHz to 868 MHz with power levels up to 2 W, Part 1 – Technical characteristics and test methods*

European Telecommunications Standards Institute (ETSI), EN 302 208: *Electromagnetic compatibility and radio spectrum matters (ERM) – Radio-frequency identification equipment operating in the band 865 MHz to 868 MHz with power levels up to 2 W, Part 2 – Harmonized EN under article 3.2 of the R&TTE directive*

ISO/IEC Directives, Part 2: *Rules for the structure and drafting of International Standards*

ISO/IEC 3309: *Information technology – Telecommunications and information exchange between systems – High-level data link control (HDLC) procedures – Frame structure*

ISO/IEC 15961: *Information technology, Automatic identification and data capture – Radio frequency identification (RFID) for item management – Data protocol: application interface*

ISO/IEC 15962: *Information technology, Automatic identification and data capture techniques – Radio frequency identification (RFID) for item management – Data protocol: data encoding rules and logical memory functions*

ISO/IEC 15963: *Information technology — Radio frequency identification for item management — Unique identification for RF tags.*

ISO/IEC 18000-1: *Information technology — Radio frequency identification for item management — Part 1: Reference architecture and definition of parameters to be standardized*

ISO/IEC 18000-6, *Information technology — Radio-frequency identification for item management — Part 6: Parameters for air interface communications at 860 MHz to 960 MHz*

ISO/IEC TR 18046-3, *Information technology — Radio frequency identification device performance test methods — Part 3: Test methods for tag performance*

ISO/IEC TR 18047-6, *Information technology — Automatic identification and data capture techniques — RFID device conformance test methods — Part 6: Test methods for air interface communications at 860 - 960 MHz*

ISO/IEC 19762: *Information technology AIDC techniques – Harmonized vocabulary – Part 3: radio-frequency identification (RFID)*

ISO Guide to the Expression of Uncertainty in Measurement, ISBN 92-67-10188-9, 1993

U.S. Code of Federal Regulations (CFR), Title 47, Chapter I, Part 15: *Radio-frequency devices, U.S. Federal Communications Commission*

3. Terms and definitions

The principal terms and definitions used in this document are described in the Protocol and in ISO/IEC 19762.

The principal symbols and abbreviated terms used in this document are detailed in

- ISO/IEC 19762: *Information technology AIDC techniques – vocabulary*.
- *EPCglobal™: EPC™ Radio-Frequency Identity Protocols, Class-1 Generation-2 UHF RFID, Protocol for Communications at 860 MHz – 960 MHz, Version 1.1.0.*

Symbols, abbreviated terms, notation, and additional terms specific to this document are as follows:

3.1 Additional terms and definitions

Terms and definitions specific to this document that supersede any normative references are as follows:

Backscatter
The means by which a Tag communicates with a Reader. The Tag modulates the reverse link waveform by changing its impedance, thereby modifying the amplitude or phase of the reflected signal.

Baseband
Term used to describe the backscatter signal after the RF carrier has been frequency translated to DC in the receiver.

BLF
Backscatter Link Frequency. The subcarrier frequency of the Tag backscatter. A Miller subcarrier s used for performance testing to minimize the impact of the transmitted carrier at the receiver.

Compliance
Suitability of products, processes, or services, for use together, under specified conditions, without causing unacceptable interactions, in fulfillment of the requirements of a protocol.

dBil
Decibel units for antenna gain. The gain relative to an isotropic radiator as measured by a linearly polarized measuring antenna. The more standard unit for antenna gain, dBi, does not convey the polarity of the measuring antenna. For instance, the gain of a perfect circularly polarized antenna may be 9 dBi when measured by a matched circularly polarized measuring antenna and 6 dBil as measured by a linearly polarized measurement antenna.

Dense reader PR-ASK
Dense reader PR-ASK is the term used for a particular set of forward link signaling parameters characteristic of dense reader operation in the field. The specific dense reader PR-ASK signaling parameters are enumerated in section 5.4. Dense reader PR_ASK is the favored forward link signaling used for Tag performance testing.

EIRP
Effective Isotropic Radiated Power. The amount of power that would have to be emitted by an isotropic antenna to produce the power density observed in the direction of maximum antenna gain. EIRP is a measure of the signal strength in a particular direction leaving a transmitter.

Forward link
Signaling from the Reader to the Tag.

I, Q
In-phase and Quadrature-phase digital samples collected at the output of the receiver shown in Figure 6-2.

IC
Integrated Circuit. IC typically refers to the chip used in the Tag. The IC determines all of the operational capabilities of the Tag and is a major contributor to Tag performance.

ITF
Interrogator Talks First. Protocol used in Gen 2 where the Interrogator (Reader) wakes up the Tag and controls many aspects of the Tag communications.

Msps

Mega-sample per second. The rate at which the receiver samples the baseband backscatter signal. For example, 1 Msps means that the signal is converted to one million I digital words and one million Q digital words per second.

Reverse link
Signaling from the Tag to the Reader.

RIP
Received Isotropic Power. The power measured at the output of a 0 dBi gain receive antenna. RIP is a measure of the signal strength at a point in space, typically the input to a receive antenna.

Word
A 16-bit row in EPC memory as described in the Protocol.

3.2 Symbols

Symbols specific to this document that supersede any normative references are as follows:

BLF	Backscatter link frequency (kHz)
DR	Divide ratio
$EIRP_{Tx}$	Effective isotropic radiated power from transmitter (dBm)
$EIRP_{TUT}$	Effective isotropic radiated power from Tag under test (dBm)
G_{Rx}	Receiver electronics gain (dBV)
G_{RxA}	Receive antenna gain – linear (dBil)
G_{TxA}	Transmit antenna gain – linear (dBil)
h	Height of Tag under test from floor (meters)
P_{Rx}	Received power at output of receive antenna (dBm)
P_{Tx}	Transmit power at input to transmit antenna (dBm)
Q	Slot-count parameter used in *Query* command
r	Range to Tag under test from test antennas (meters)
RIP_{Rx}	Received isotropic radiated power at receiver (dBm)
RIP_{TUT}	Received isotropic radiated power at Tag (dBm)
$\mathbf{xxxx}_2$	binary notation
$\mathbf{xxxx}_h$	hexadecimal notation
θ	Angle between transmit and receive antennas (degrees)

3.3 Abbreviated terms

Terms and definitions specific to this document that supersede any normative references are as follows:

AUT	Antenna under test
CRC	Cyclic redundancy check
CW	Continuous wave
EIRP	Effective isotropic radiated power
EPC	Electronic product code
ETSI	European Telecommunications Standards Institute
FCC	Federal Communications Commission
IC	Integrated circuit
ITF	Interrogator talks first (reader talks first)
PIE	Pulse-interval encoding
PL	Path loss
PSK	Phase shift keying or phase shift keyed
PR-ASK	Phase-reversal amplitude shift keying

RIP	Received isotropic power
RN16	16-bit random or pseudo-random number
RF	Radio frequency
RFID	Radio-frequency identification
TID	Tag-identification or Tag identifier, depending on context
TUT	Tag under test

3.4 Notation

This document uses the following notational conventions:

- States and flags are denoted in bold. Example: **ready**.
- Commands are denoted in italics. Variables are also denoted in italics. Where there might be confusion between commands and variables, this specification will make an explicit statement. Example: *Query*.
- Command parameters are underlined. Example: <u>Pointer</u>.
- For logical negation, labels are preceded by '~'. Example: If **flag** is true, then **~flag** is false.

4. Tag Parameters

All testing of category 3 parameters shall be performed according the procedures in section 8 and under the conditions specified in section 5, unless specified otherwise.

Table 4-1 – Tag datasheet

Item	Parameter	Min	Typical	Max	Units	Cate-gory	Comment
	Product Information						
1	Tag manufacturer		Company name			1	
2	Product model number		Part number			1	
3	IC manufacturer		Company name			1	
4	IC model number		Part number			1	
5	Dimensions				mm	1	Length
					mm	1	Width
					mm	1	Thickness
6	Material					1	Substrate
						1	Antenna
						1	Overlay
						1	Liner
						1	Adhesive
7	Intended application					1	
8	Intended region of operation		All/NA/EU/JA			1	List all that apply or “All “if intended for full band operation
9	Single or dual antenna		Single/Dual			1	
	Certification						
10	EPCglobal™ conforrmance certified?		Yes/No			1	
11	EPCglobal™ interoperability certified?		Yes/No			1	
	IC Information						
12	EPC size		No. of bits		bits	1	
13	TID size		No. of bits		bits	1	
14	TID writable?		Yes/No			1	
15	Writes require clearing?		Yes/No			1	Does writing over non-zero contents require first clearing (zeroing the contents)?
16	User memory and size (if present)		No. of bits/No		bits	1	
17	Access control (access password)?		Yes/No			1	
18	Kill enabled (supports nonzero kill password)?		Yes/No			1	
19	Proprietary commands?		List/No			1	

Item	Parameter	Min	Typical	Max	Units	Cate-gory	Comment
20	Custom commands?		List/No			1	
21	Error-code support (error-specific codes)?		Yes/No			1	
22	Memory retention and endurance					2	Data retention dura-tion vs. number of write/read cycles
	Performance						
23	Read range				meters	3	
24	Orientation tolerance				%	3	
25	Frequency tolerance				%	3	
26	Interference tolerance				%	3	500 kHz offset
					%	3	1.2 MHz offset
27	Backscatter range				meters	3	
28	Write range				meters	3	
29	Write time				ms	3	Zero initialized
					ms	3	Non-zero initialized
30	Tag proximity				cm	3	
	Operating limits						
31	Maximum RF input power				dBm	2	
32	Operating temperature				ºC	2	
33	Storage temperature				ºC	2	
34	ESD tolerance				kV	2	Human body model
	Qualification information						
35	Temperature Humidity Bias (THB)				hours	2	
36	Bending resistance				bends	2	
37	Temperature cycles				cycles	2	

5. Conditions

5.1 Number of tags to be tested

Unless otherwise specified, testing shall be performed on 30 randomly chosen tags among a population of 1000 functional samples. The reported performance shall be the 90% statistic, that is, the performance level attained by the best 27 of the 30 samples.

5.2 Tag initialization

All Tags tested shall be initialized with an EPC of 3034125BB024C34123456789. EPC memory shall be unlocked and the access and kill passwords, if supported, shall be zero.

5.3 Test environment

Unless otherwise specified, testing shall take place in a 1 atmosphere air environment of temperature 23° C +/- 5° C (73° F +/- 9° F) and of relative humidity 20 % to 75 %.

5.4 Signalling

5.4.1 Waveform

Tests requiring forward link commands shall use dense reader PR-ASK signaling, unless otherwise specified. Dense reader PR-ASK is defined as a 25 µs Tari, 2:1 PIE, 64/3 DR, extended preamble, M=4 Miller subcarrier, 256 kHz BLF, and a rise and fall time of 7.75 ± 0.5 µs.

5.4.2 Protocol

The Reader shall transmit *Query* commands with the following binary arguments when inventorying a Tag.

DR	1	: 64/3
M	10	: 4
TRext	1	: Extended preamble
Sel	01	: All
Session	01	: S1
Target	0	: A->B
Q	0000	: 0

The Test Reader shall *ACK* all RN16 responses and verify an EPC for bit errors (value matches expectation) and CRC errors. Both an RN16 and correct EPC are necessary in order to declare a successful read.

The transmitter shall remain at a fixed frequency sending a repeating *Query/ACK* command sequence making A-to-B attempts. If an EPC is returned by the TUT, the transmitter shall wait at least 200 µsec prior to issuing the next *Query* command. The transmitter has the option to continuously transmit a CW or power cycle during the wait period between EPC and the next *Query*.

Writing shall be attempted through the secured state following a successful inventory. The same iterative inventory approach described for reading shall be used. An access password is not required because it is set to zero in the TUT. The *Write* command shall be used to write a single word to location 20 hex in the EPC memory bank. If the memory is initialized with a non-zero value and the tag vendor specifies that the memory requires zeroing (clearing) prior to a write attempt, then the cumulative time to clear the memory and write a new non-zero value is reported (Non-zero initialized entry in Table 4-1).

All interactions between the test set and TUT shall adhere to the timing requirements in the Gen 2 protocol specification with the exception of for the wait period between returned EPC and the next *Query* command, which is inserted to prevent the TUT session flag from transitioning to the B state.

5.4.3 Frequency

Some Tags are designed to be operated over the worldwide 860 – 960 MHz frequency band while others are optimized for regional performance. The majority of tests described in this document are performed at a fixed frequency. The default test frequency shall be the center of the intended regional operating band. If multiple bands or worldwide operation are declared by the vendor, the default frequency shall be at the center of the North American band. The center frequency for a region is determined by adding the maximum and minimum high power band limits (band edges not channel edges or centers) and dividing by two. Center frequencies for Europe, North America and Japan are 866.6, 915, and 953 MHz respectively based on high power band edge pairs of (865.6, 867.6), (902, 928) and (952, 954).

5.4.4 Trials

A number of tests require the operator to vary the transmitter power until a 50% success rate is achieved. A statistical confidence of 95% that a candidate power level is too high or low occurs when 4 successive successes or failures are measured, respectively. If one or two contrary results occur, then 6 and 8 trials are respectively required to achieve a 95% confidence level.

A minimum of 4, 6, or 8 trials shall be made at each power level when the number of contrary results are 0, 1, or 2. If more than 2 contrary results occur, then at least 9 trials shall be made and the verdict shall be determined by a majority vote of the outcomes.

5.5 RF environment

The tests shall be performed in a controlled RF environment. A test range, anechoic chamber or other, achieving the following RF conditions is required.

5.5.1 RF reflections

The ceiling and walls of the test range shall provide a minimum reflection isolation of 30 dB at 1 GHz. The reflection isolation from the floor shall be at least 10 dB at 1 GHz. RF absorbing material is typically required to achieve the specified reflection isolation.

Personnel shall be at least two meters away from the transmitter, receiver, and TUT and not downstream from the transmitter during testing. If personnel are isolated by an RF barrier, these standoff requirements do not apply.

5.5.2 Ambient power level

The test range shall be adequately isolated such that stray RF power measured in a 10 kHz bandwidth is less than -60 dBm over the 0.5 to 2 GHz band with the exception of the TUT backscatter bands where the requirement is -90 dBm in the same measurement bandwidth. The TUT backscatter bands are 64 kHz bands centered at ± 256 kHz offset from the center frequency specified in 5.4.3 and about the center frequencies specified in 8.3. Measurements shall be made at the position of the receive antenna over a one hour period under a peak hold condition.

Conductive shielding surrounding the test range is typically required to attenuate stray RF signals to the specified levels. Aluminum foil bonded to insulating foam, or sheet aluminum are examples of shielding materials.

5.6 Pre-conditioning

Tags to be tested shall be conditioned to the test environment for a period of 24 hours before testing.

5.7 Default tolerance

Unless otherwise specified, a default tolerance of +/- 5 % shall be applied to the test equipment requirements (*e.g.* linear dimensions) and the test method procedures (*e.g.* test equipment adjustments).

5.8 Total measurement uncertainty

The total measurement uncertainty for each quantity determined by these test methods shall be stated in the test report.

Basic information is given in “ISO Guide to the Expression of Uncertainty in Measurement“, ISBN 92-67-10188-9, 1993.

5.9 Test result reporting

Two levels of reporting of test results shall be supported. A summary report shall be produced that lists data in format of the Tag datasheet (Table 4-1). A more comprehensive report shall be produced that includes the data specified in the Reporting section for each parameter listed in section 8. Category 2 data will be provided at the discretion of the Tag or IC vendor.

Summary report data shall be entered at a resolution of one digit to the right of the decimal point in the units listed in the Table 4-1. For example, 8.7 meters or 56.2%.

5.10 Test mounting material

All Tags shall be mounted on an RF-inert, styrene foam block tailored to the approximate dimensions of the Tag. Results collected under these conditions are commonly referred to as free air performance.

The Tag manufacturer may wish to test Tags that are designed to perform well on other materials. In such cases the Tag shall likewise be affixed to a surface of the subject material tailored to the Tag dimensions. A description of the mounting details, such as if a spacer is used; the thickness of the spacer, etc. shall be documented in the test report. If the dielectric parameters or other critical aspects of the material are known they should also be documented. Results collected under these conditions are commonly referred to as applied performance.

6. Test Setup

6.1 Functional Setup

A functional block diagram of Tag performance test setup is shown in Figure 6-1. RF transmissions are contained within a controlled environment meeting the shielding and reflection requirements of section 5.4.3.

Transmit source data is generated in the CPU and transferred to the transmitter electronics where it is encoded into an RFID signal. The signal generator provides an interference signal that can be optionally added to the forward link signal through a directional coupler. A second directional coupler routes a portion of the composite forward link to a power meter so that non-invasive transmit power readings are possible. The forward link signal is radiated toward the Tag through the transmit antenna. The transmitter and antennas shall meet the requirements specified in Table 6-1.

The Tag is mounted to a firm backing that is attached to a rotating mast constructed of non-RF-reflective and non-RF-conductive material. The relative dielectric constant of the mast material shall be less than 6.0.

The default orientation of the TUT on the mast shall be as specified in 6.2. The mast can be independently rotated via computer control in azimuth (left to right from the vantage point of the transmit antenna) or in elevation (up and down from the same vantage point). The azimuth and elevation rotational axes are vertical and horizontal, respectively, and intersect at the center of the TUT.

The Tag backscatter (reverse link) signal is collected by the receive antenna and passes into the receiver. The receiver shall be a Quadrature Demodulator Receiver as shown in Figure 6-2 meeting the requirements of Table 6-1. The reverse link signal is RF filtered, downconverted, baseband filtered, and sampled in the receiver. Downconversion to baseband is by direct conversion in the example, but a heterodyne or other traditional conversion chain are acceptable. The final downconversion to baseband is accomplished by splitting a local oscillator (LO) signal through a 90 degree hybrid. Receiver output I and Q samples are passed to the CPU for post-processing.

The CPU controls test flow, configures the hardware, and processes and stores data. In the case where a forward link command structure depends on an immediately preceding Tag response, the CPU must be fast enough to create the command within the Gen 2 timing limits. An example is generating the RN16 that must be inserted into the *ACK* command sent to the Tag to elicit its EPC. A fast processor or FPGA may be necessary to complete such real-time operations.

A user interface that accommodates creating, editing, and selecting test cases shall be provided. A data storage capability shall exist as well as software to generate the reports specified in section 8.

Neither specific test equipment nor a commercial reader is specified for use in the test set. Any complement of hardware and software that meets the requirements of this section may be used to test Tags.

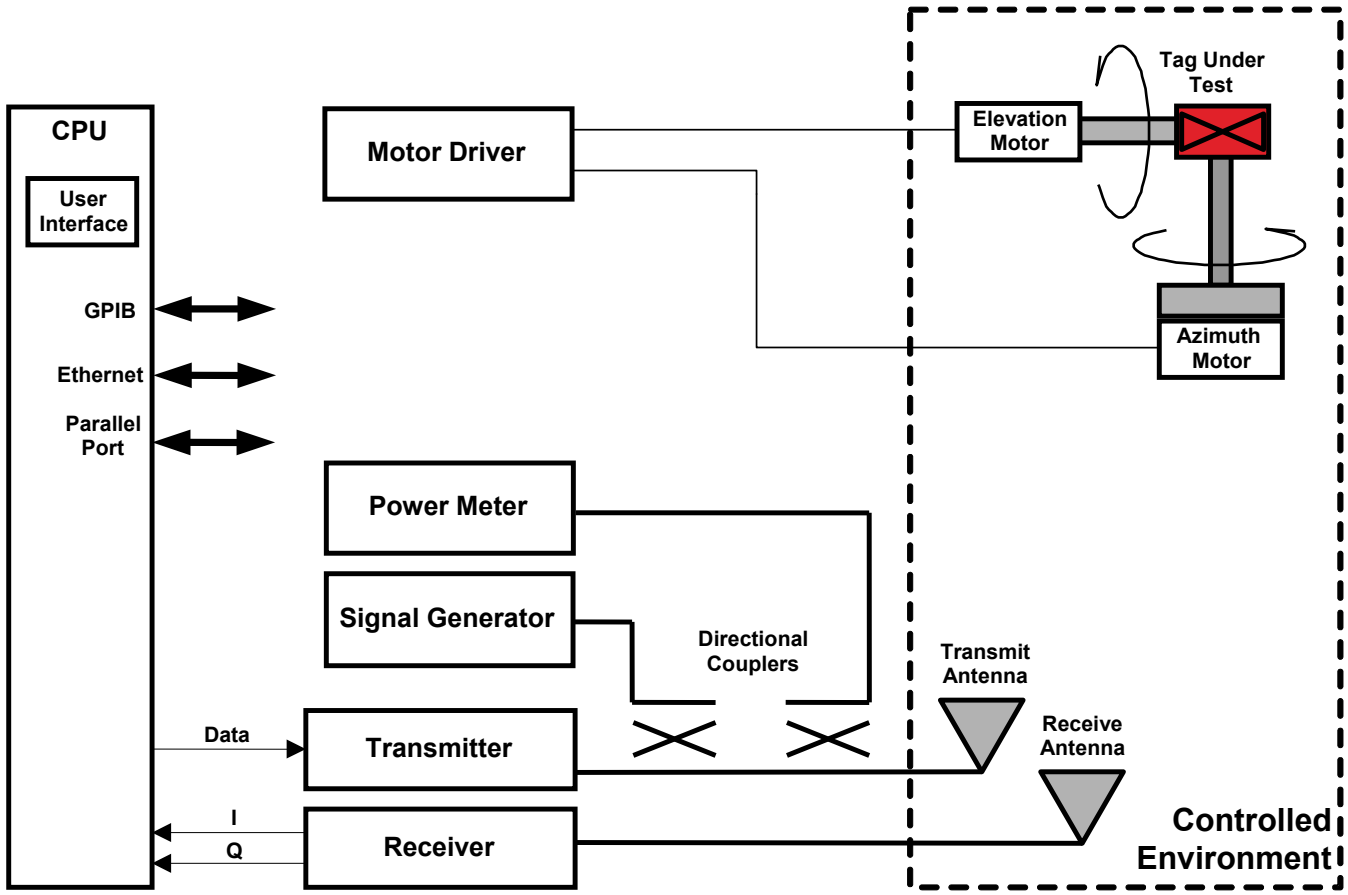

Figure 6-1 - Test set functional block diagram

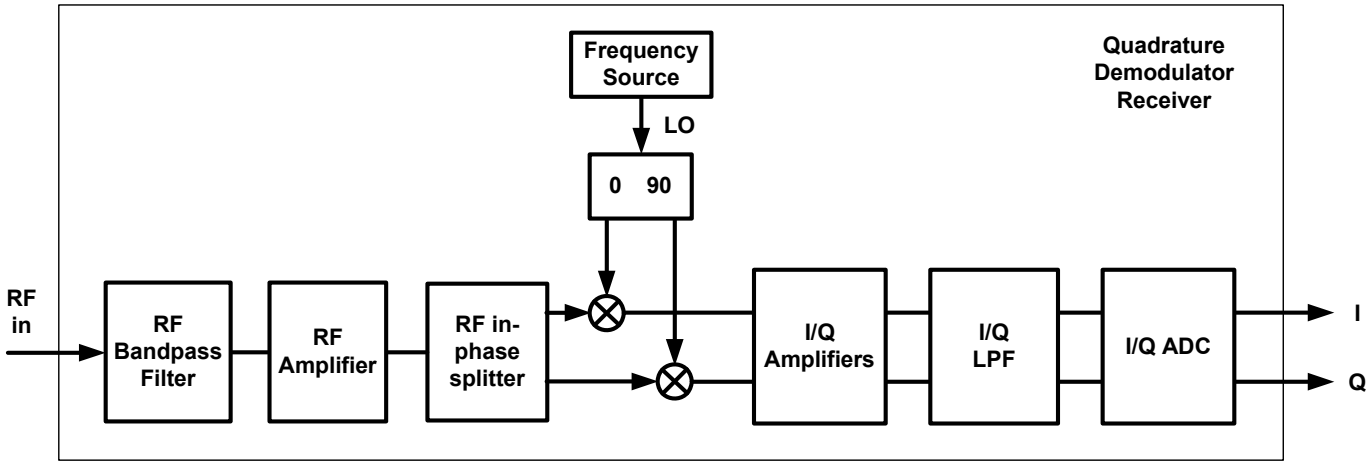

Figure 6-2 - Quadrature demodulator receiver architecture

6.2 Physical Setup

Top and side views of the physical test setup are shown in Figure 6-3. Transmit and receive antennas are stacked (example shown) or placed side-by-side and positioned at equal distances from the Tag Under Test (TUT). The range to the Tag, height of the Tag, and the angle between transmit and receive mechanical boresights are constrained by the requirements in Table 6-1. Optional RF shielding between the antennas is shown under the as-

sumption that it is necessary to achieve the isolation requirement. Separate transmit and receive antennas (bi-static configuration) are dictated based on the need to optimally align polarizations for accurate backscatter power measurements.

The Tag shall be oriented on the mast such that its longest dimension is horizontal. If the Tag is two-axis symmetric (*e.g.* square), then its default orientation should be as specified by the tag vendor.

The Tx and Rx antennas are rotated such that their major axial ratio axes are horizontal. See 7.4 for calibration details.

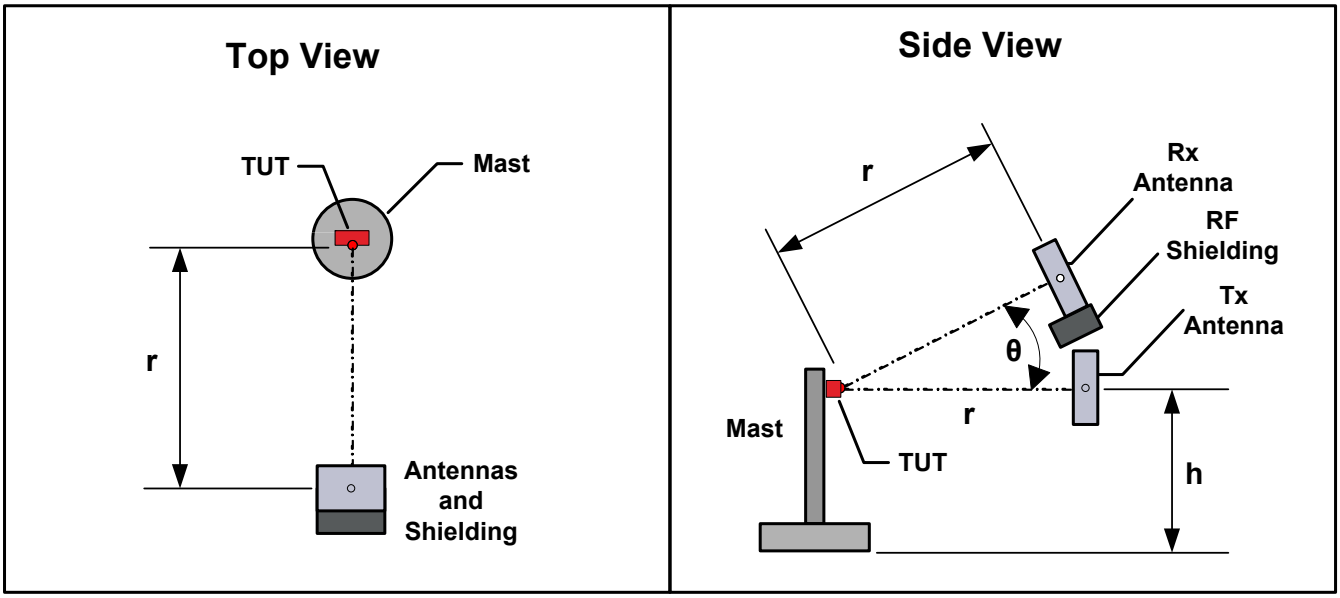

Figure 6-3 - Test set physical block diagram

6.3 Link Definitions

Several important link parameters are defined in this section that provides the framework for properly setting and measuring power levels. The transmitter and receiver interfaces to the antennas are defined as the connection points between electronics and antenna cables (see P_{Tx} and P_{Rx} locations in Figure 6-4). “Receiver input” and “Rx antenna output” are synonymous terms as are “transmitter output” and the “Tx antenna input”. Powers measured at these interfaces are defined as P_{Tx} and P_{Rx}. Received powers, in the air, at the antenna location, are defined in terms of Received Isotropic Power (RIP). This is the power that would be collected by a unity gain antenna at the same location. Transmitted power, in the air, at the transmitting antenna is defined in terms of Effective Radiated Isotropic Power (EIRP). This is the power calculated to be present at the transmitting antenna when power is measured at boresight by a far-field, unity gain receiving antenna. The free space loss establishes the relationship between EIRP and RIP, that is, RIP = EIRP – PL where PL is the free space path loss and all terms are in decibel units.

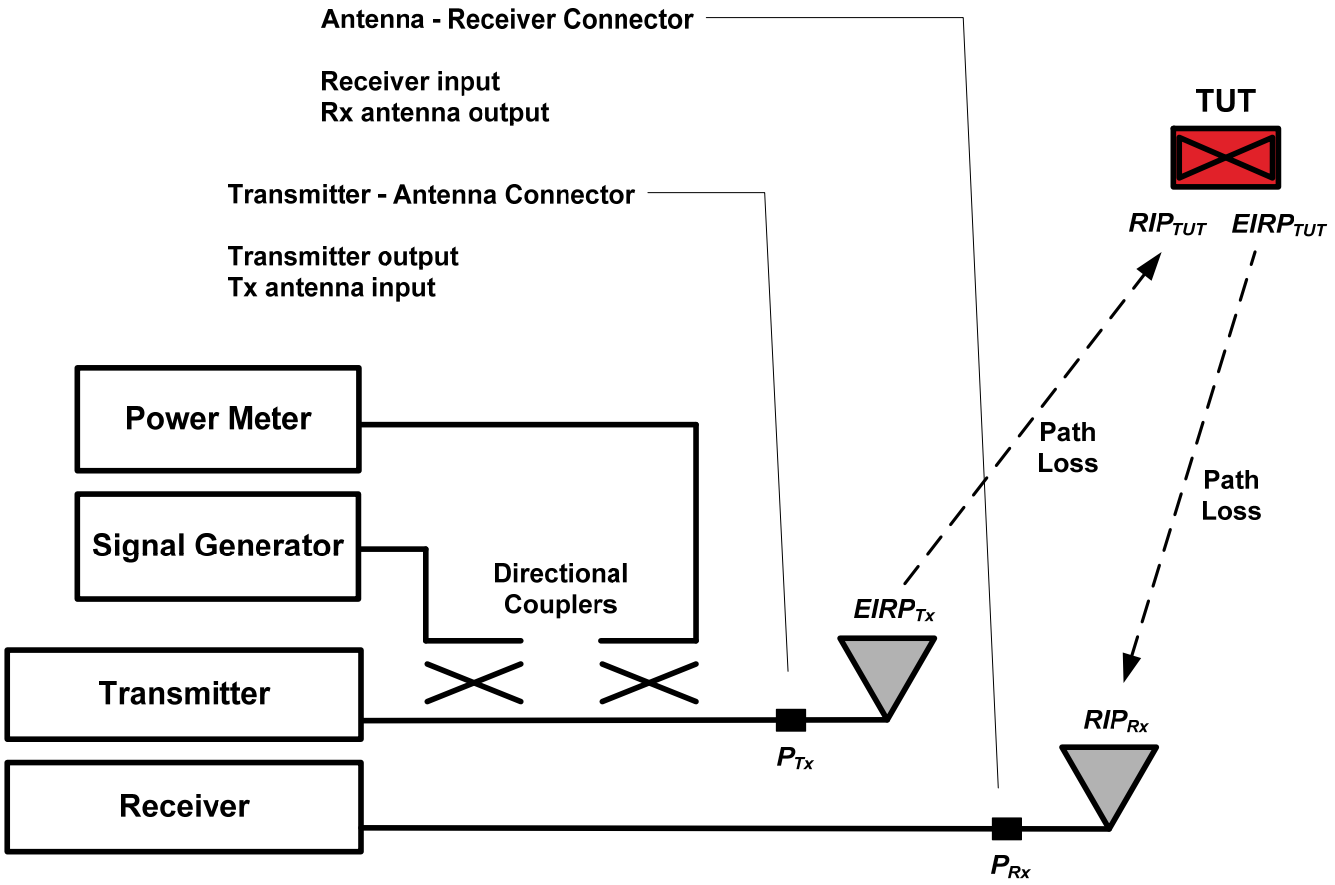

Figure 6-4 - Link parameters

6.4 Test Set Requirements

Table 6-1 lists key test set parameters and requirements. Meeting these requirements assures that a test set will be capable of generating the requisite test signals and accurately measuring the Tag performance. All requirements apply over the UHF RFID band from 860 to 960 MHz unless stated otherwise.

Table 6-1 – Test set requirements

Requirement	Min	Typ	Max	Units	Comment
Antennas (Tx and Rx)					
Frequency	860		960	MHz	
Polarization		RHCP			Transmit
		LHCP			Receive
Gain	5		7	dBil	On-boresight, measured along major axis
Axial ratio			1	dB	
3 dB Beamwidth	50			deg	Two sided, azimuth & elevation
Input VSWR			1.4:1		
Transmitter					
Frequency	860		960	MHz	Static frequency
Frequency accuracy	-10		10	ppm	
Output power	7		27	dBm	
Power adjust steps		0.25		dB	
Signaling		PR-ASK			See 5.2
1 dB compression	33			dBm	
Interferer signaling		CW			
Interferer output power	-3		27	dBm	Measured at transmitter output
Interferer power adjust steps		0.25		dB	
Receiver					
Demodulator					Quadrature demodulator with vector outputs (see Figure 6-2)
Frequency	860		960	MHz	
Frequency accuracy	-10		10	ppm	
Sensitivity			-70	dBm	Receiver input signal power to achieve a 10^{-5} bit-error-rate demodulation of dense reader PR-ASK
Noise figure			35	dB	
1 dB compression	-10			dBm	Linearly process Tx to Rx coupled signal
Output bandwidth	1		1.5	MHz	Captures 256 kHz subcarriers

Requirement	Min	Typ	Max	Units	Comment
Output sampling rate (complex)	1.5			Msps	Oversampling to limit aliasing
IQ phase imbalance			3	deg	
IQ amplitude imbalance			0.1	dB	
IQ offset			0.5	dB	Referenced to demodulator input
System					
Range to tag (r)	0.8		1	m	
Mast height (h)	1			m	
Tx to Rx angle (θ)			25	deg	
Tx to Rx isolation	50			dB	Transmitter cable output to receiver cable input
Test conditions					See section 5

7. Calibration

7.1 Power Definitions

Forward link power is defined as the average power measured over a 1 ms period during the CW portion just prior to a Reader command as shown in Figure 7-1.

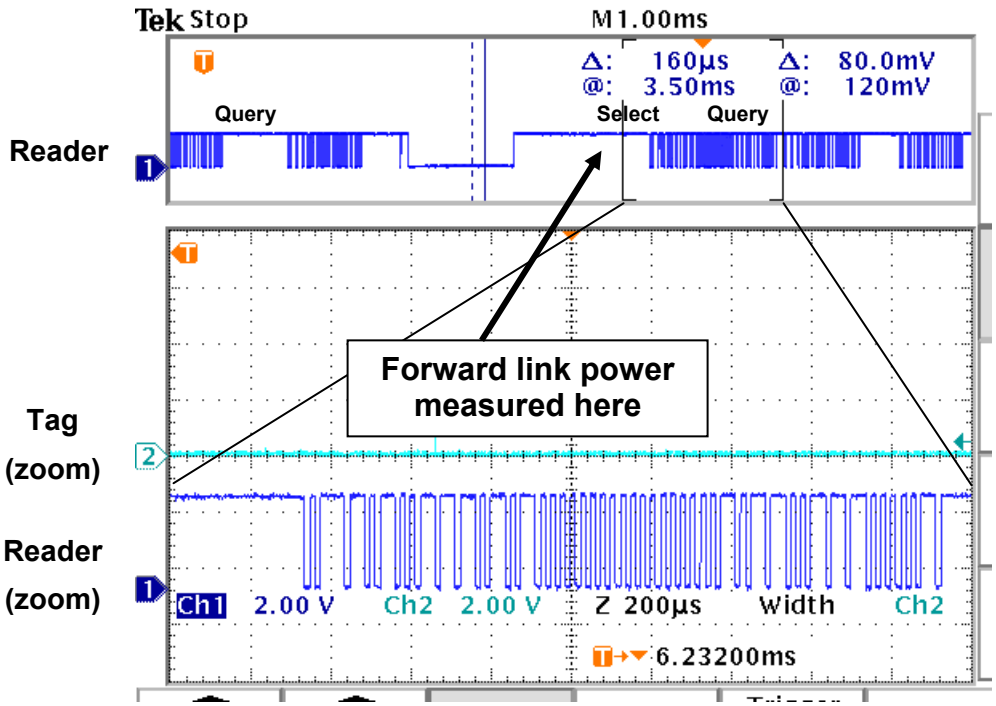

Figure 7-1 - Forward link power measurement

The reverse link power is the average power measured over the extended preamble of an RN16 response to a dense reader PR-ASK command as defined in 5.4.1.

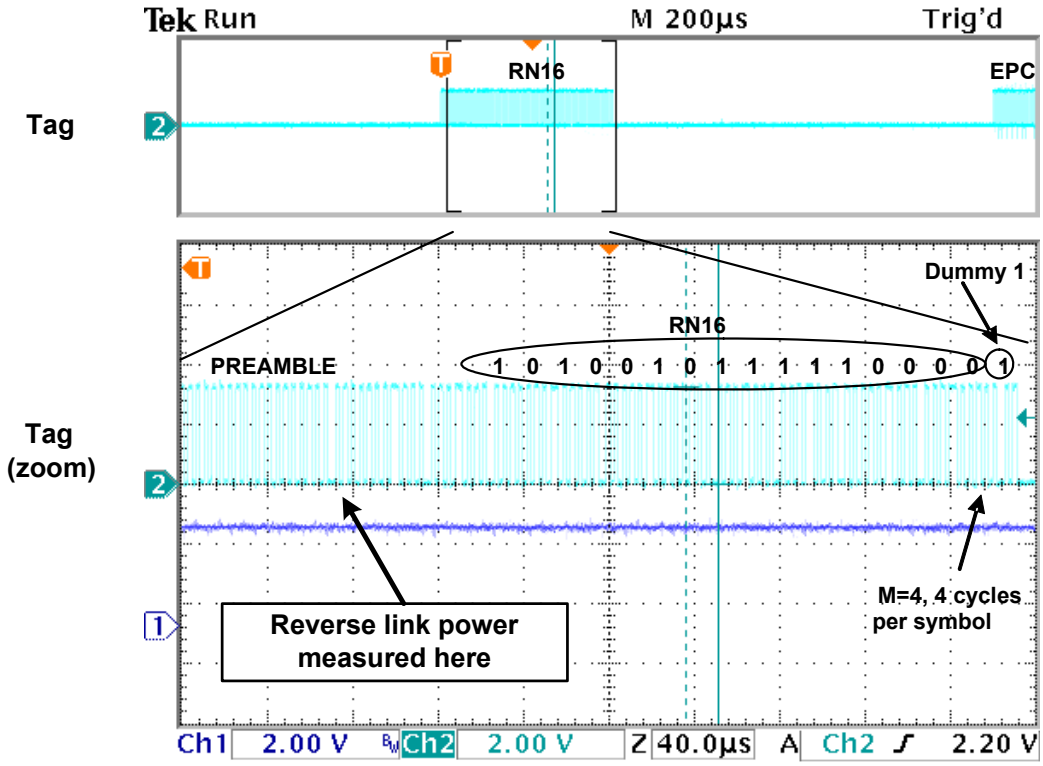

Figure 7-2 - Reverse link power measurement

7.2 Transmit Power Calibration

Transmit power measurements are made at the coupled output of the directional coupler in the transmit path using a gated power meter with capability to measure peak power in the period just prior to a transmitted command as described in 7.1. Transmit EIRP is determined by applying a transmitter calibration factor to a power measurement. The calibration factor is the difference (dB) between the power measured at the transmitter output and the coupled port plus the transmit antenna on-boresight gain.

$$EIRP_{Tx} = P_M + P_\Delta + G_{TxA}$$

Where:

$EIRP_{Tx}$ is the transmit EIRP in dBm

P_M is the measured power at the power meter in dBm

P_{Tx} is the transmitter output power in dBm

G_{TxA} is the peak linear antenna gain measured across the axial ratio major axis in dBil

P_Δ is the transmitter output power minus the coupled output power in dB (pre-calibrated)

7.3 Receive Power Calibration

The backscattered RIP is determined by measuring the power at the Quadrature Demodulator output. IQ output power is the unbiased sum of the squares of I and Q digital samples. The RIP is determined by subtracting the receiver gain and antenna gain from the IQ output power.

$$RIP_{Rx} = P_{IQ} - G_{Rx} - G_{RxA}$$

Where:

RIP_{Rx} is the received isotropic power at the Rx antenna in dBm

P_{IQ} is the power measured at the Quadrature Demodulator output determined as

$$P_{IQ} = 10 * \log\left(\sum_{n=1}^{N} \left[\left(I_n - \bar{I}\right)^2 + \left(Q_n - \overline{Q}\right)^2 \right] \right)$$

I_n, Q_n are quadrature baseband I and Q digital samples measured over the long preamble

$\bar{I}, \overline{Q}$ are the means of the same I and Q samples

N is the number of complex samples captured in a 250 µsec interval

G_{RxA} is the peak linear gain of the Rx antenna along the axial ratio major axis in dBil

G_{Rx} is the receiver electronics gain in dB units measured according to the following calibration procedure:

1) Connect a signal generator to a power meter or spectrum analyzer.
2) Set the signal generator for a -30 dBm output power at the center of the intended band of operation as defined in 5.4.3 and measure the power at the end of a test cable connected to the generator output. Record the power reading, P_{PM}, in dBm.
3) Connect the end of the test cable to receiver input (where the receive antenna is normally connected) and power up the receiver equipment.
4) Set the receiver LO frequency equal to the transmit frequency and configure the receiver for a baseband bandwidth of 1 MHz and complex sampling rate of at least 50% greater than the sampling rate.
5) Capture 250 µsec of I/Q samples $\left(IREF_n \text{ and } QREF_n\right)$ and determine $\overline{IREF}$ and $\overline{QREF}$, the I and Q means respectively.
6) Determine the receiver electronics gain by subtracting the initial power meter measurement from the power measured at the Quadrature Demodulator output.

$$G_{Rx} = 10 * \log\left(\sum_{n=1}^{N} \left[\left(IREF_n - \overline{IREF}\right)^2 + \left(QREF_n - \overline{QREF}\right)^2 \right] \right) - P_{PM}$$

7.4 Antenna Gain Calibration

The gain of the circularly polarized antennas used in the setup in Figure 6-1 is defined as the linear gain (measured by a linearly polarized test antenna) oriented along the major axial ratio axis. That is, the maximum linear gain. Antennas shall be oriented with their major axes horizontal for all tests specified in this document. The antenna gain can be measured against a linearly polarized reference antenna with a known gain according to the following process.

1) Calibrate a Network Analyzer with S-parameter capability using an open, short and 50 ohm load.
2) Configure the test setup as shown in Figure 6-1 except with a linear reference antenna in place of the

TUT. Orient the reference antenna horizontally approximately 1 meter from the Antenna Under Test (AUT).

3) Record the distance between the reference antenna and AUT apertures.
4) Disconnect the Tx and Rx cables from the antennas and mate them to each other.
5) Sweep the S21 (transmission loss) on the Network Analyzer from 860 to 960 MHz. Save as the reference.
6) Reconnect the Tx and Rx cables to the reference and AUT and perform the same S21 sweep.
7) Rotate the AUT until the S21 gain is maximized. This is the proper AUT orientation for conducting tests.
8) Calculate the AUT gain by subtracting the reference antenna gain and path loss from the S21 measurement. The path loss (dB) is determined from the Friis equation using the distance between antennas and the frequency.
9) Rotate the AUT 90° clockwise (facing the front of the antenna) and repeat step 8.
10) Repeat step 9 at 180° and 270°.
11) The peak difference (dB) between the 0° orientation and the other orientations is the axial ratio. Compare it to the requirement in Table 6-1.

If the gain of the reference antenna is not known, the AUT and reference antenna gain can be determined using a third linear antenna.

1) Perform the first 7 steps of the procedure above.
2) Substitute the third linear antenna for the reference antenna with the same horizontal orientation and sweep S21 as before.
3) Substitute the reference antenna for the AUT (horizontal orientation) and sweep S21.
4) There now exists three sets of data with three unknowns, the gains of each antenna. Subtract the path loss from each set and solve for the gains.

8. Test Methods

Testing shall be performed according to the procedures described in this section using the setup defined in section 6, the calibration procedures defined in section 7, and under the conditions defined in section 5.

8.1 Read Range

8.1.1 Purpose

The purpose of the read range test is to determine the sensitivity of the Tag. The reported sensitivity is the forward link range at the center of the intended band of operation along the mechanical boresight of the Tag assuming a 35 dBm Reader EIRP. Class 1 tags are typically limited by forward link range (reverse link range is higher) so this metric indicates the Tag's nominal free space range.

8.1.2 Description

With the Tag positioned in the far-field of the transmit antenna, the transmit power is varied until the Tag correctly responds with a 96-bit EPC 50% of the time. A success is defined as the return of a valid RN16 and error-free EPC data in response to *Query* and *ACK* commands from the test reader. The free space path loss to the Tag is used to determine the free space range under the assumption of a 35 dBm transmit EIRP.

The reported range is the Tag range that is expected in an environment free of RF reflections, interference, and lossy materials. The range experienced in a real-life environment may be less or greater than the reported nominal value. A conversion table is provided in Annex A listing the relationship between range (meters), RIP at the Tag (dBm), and field strength at the Tag (volts/meter).

8.1.3 Procedure

1) Position the Tag Under Test (TUT) on the mast in the default orientation specified in 6.2.
2) Set the transmitter for an EIRP below the minimum expected to elicit a response from the TUT. Set the frequency as specified in 5.4.3.
3) Repeatedly transmit the dense reader PR-ASK signal defined in 5.4 for reading and monitor the success rate.
4) Increase the transmit EIRP in 0.25 dB steps until the success rate reaches 50%. Record the EIRP.
5) Increase the EIRP by 1 dB and decrease the EIRP in 0.25 dB steps until a 50% success rate occurs. Record the EIRP.
6) Calculate the mean of the two EIRPs and use it to determine the nominal TUT read range assuming a 35 dBm EIRP using the following expression.

$$\text{Read Range (meters)} = r * 10^{\left(\frac{35-\overline{EIRP_{Tx}}}{20}\right)}$$

Where :

r is the range to the Tag in the test setup in meters

$\overline{EIRP_{Tx}}$ is the mean transmit EIRP in dBm

8.1.4 Reporting

The test report shall include the following information:

1. Location, time, conditions, and conductor of test
2. Description of TUT
3. Low-to-high, high-to-low, and mean EIRP for each TUT tested
4. Read Range for each TUT tested
5. Ranking in descending order, determine the 90% Read Range statistic per 5.1

The 90% Read Range statistic shall be listed in Min column of the summary report (Table 4-1).

8.2 Orientation Tolerance

8.2.1 Purpose

In practice, the Tag can have any orientation relative to a Reader's antenna. The purpose of the orientation tolerance test is to determine how well the Tag sensitivity is maintained as the Tag is rotated away from its preferred orientation (typically facing the Reader antenna). The metric used is the percentage of Tag positions where the range exceeds half of the on-boresight range measured in 8.1; the higher the percentage, the greater the Tag's tolerance to orientation.

8.2.2 Description

With the Tag positioned in the far-field of the transmit test antenna, the transmit power is varied until the Tag correctly responds with a 96-bit EPC 50% of the time as described in 8.1.2. This test is repeated as the Tag is swept from -90° to +90° first in azimuth and then in elevation. The free space range is determined from transmit EIRPs, frequency and the setup distance to the Tag assuming a 35 dBm transmit EIRP. Figure 8-1 is a sample plot of read range vs. azimuth and elevation.

An orientation tolerance percentage is determined by calculating the percent area of the half-sphere where the range is at least half the maximum range. Azimuth and elevation Tag antenna gains are assumed independent for purposes of determining gains off of the principle azimuth an elevation axes. The orientation region where better than half-range performance is achieved appears in the contour plot of Figure 8-2 assuming the sample data in

Figure 8-1.

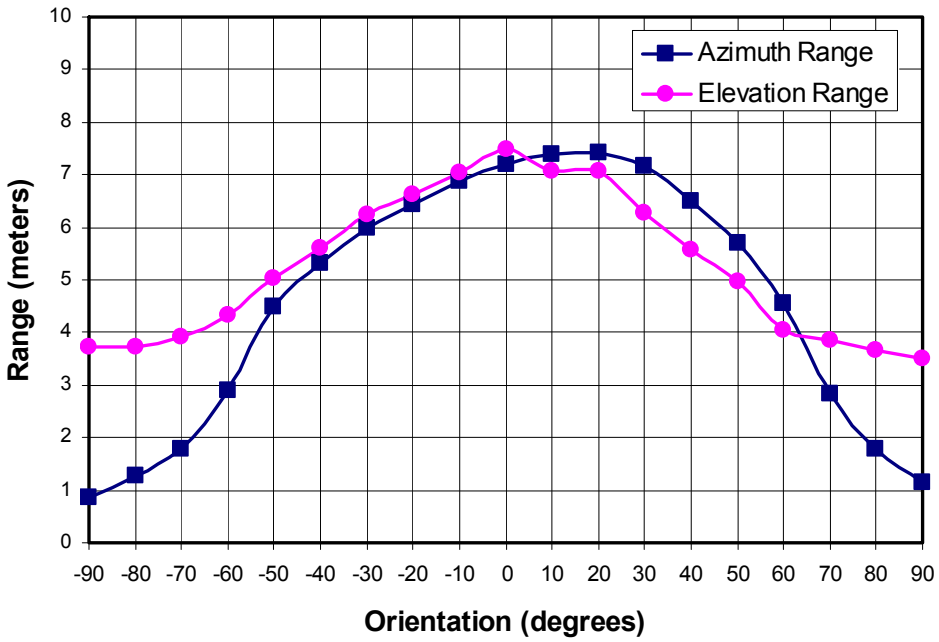

Figure 8-1 – Free space read range vs. azimuth and elevation angles

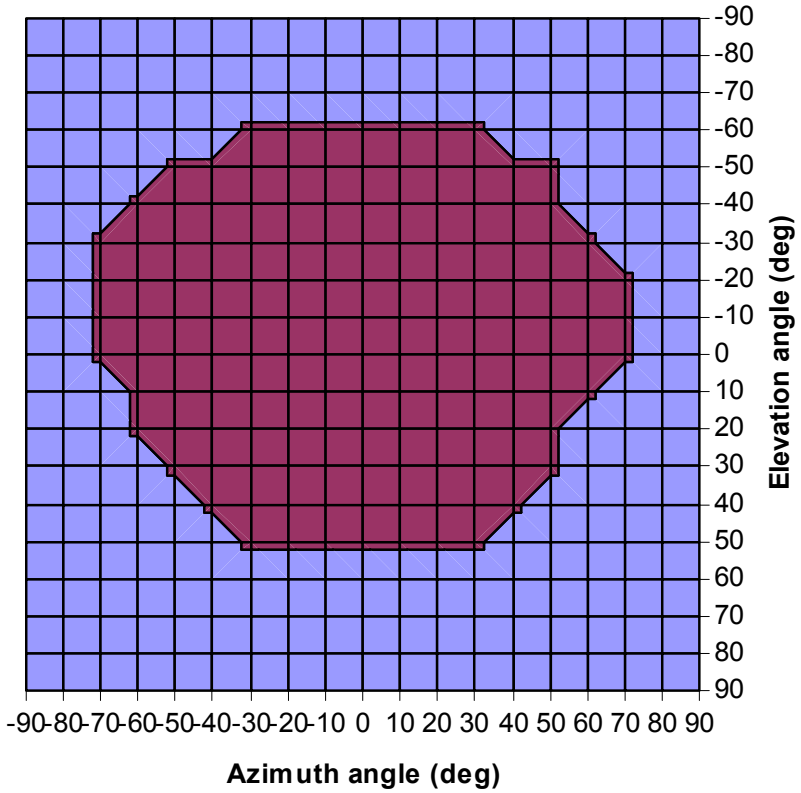

Figure 8-2 - Half-range contour

8.2.3 Procedure

1) Perform steps 1 through 6 in 8.1.3.
2) Repeat step 1 at 10, 20, 30, 40, 50, 60, 70, 80, and 90° positive azimuth angles. A positive azimuth angle is a counter clockwise rotation when viewing the test mast from above.
3) Repeat step 2 for negative azimuth angles.
4) Repeat step 2 for positive elevation angles. A positive elevation angle is an upward rotation when viewing the Tag from the perspective of the transmit antenna.
5) Repeat step 2 for negative elevation angles.
6) Plot range (meters) versus azimuth and elevation angle as shown in Figure 8-1.
7) Calculate the indicator function according to the expressions below and plot it versus azimuth and elevation angle as shown in Figure 8-2.
8) Calculate the Orientation Tolerance percentage using the following expression.

$$\text{Orientation Tolerance}\,(\%) = \frac{\sum_{j=1}^{19}\sum_{i=1}^{19}\cos(\theta_{\mathrm{El}}(\mathrm{i})) * \mathrm{U}(\theta_{\mathrm{El}}(\mathrm{i}),\theta_{Az}(\mathrm{j}))}{2.1717 * \max\left(Range(\theta_{\mathrm{El}}(\mathrm{i}),\theta_{Az}(\mathrm{j}))\right)}$$

Where:

$$\mathrm{U}(\theta_{\mathrm{El}}(\mathrm{i}),\theta_{Az}(\mathrm{j})) = \begin{cases} 1 & \mathrm{Range}(\theta_{\mathrm{El}}(\mathrm{i}),\theta_{Az}(\mathrm{j})) \geq 0.5 * \max\left(\mathrm{Range}(\theta_{\mathrm{El}}(\mathrm{i}),\theta_{Az}(\mathrm{j}))\right) \\ 0 & \mathrm{Range}(\theta_{\mathrm{El}}(\mathrm{i}),\theta_{Az}(\mathrm{j})) < 0.5 * \max\left(Range(\theta_{\mathrm{El}}(\mathrm{i}),\theta_{Az}(\mathrm{j}))\right) \end{cases}$$

$$\theta_{\mathrm{El}}(\mathrm{i}) = \begin{bmatrix} -90 & -80 & \cdots & 80 & 90 \end{bmatrix}$$
$$\theta_{Az}(\mathrm{j}) = \begin{bmatrix} -90 & -80 & \cdots & 80 & 90 \end{bmatrix}$$
$$Range(\theta_{\mathrm{El}}(\mathrm{i}),\theta_{Az}(\mathrm{j})) = Range(\theta_{\mathrm{El}}(\mathrm{i})) * Range(\theta_{Az}(\mathrm{j}))$$

8.2.4 Reporting

The test report shall include the following information:

1. Location, time, conditions, and conductor of test
2. Description of TUT
3. Low-to-high, high-to-low, and mean EIRP for each TUT tested at each angle
4. Read range for each TUT at each angle
5. Plots of read range and the indicator function (contour) for each TUT vs. azimuth and elevation
6. Orientation Tolerance percentage for each TUT
7. Ranking in descending order, determine the 90% Orientation Tolerance statistic per 5.1.

The 90% Orientation Tolerance statistic shall be listed in Min column of the summary report (Table 4-1).

8.3 Frequency Tolerance

8.3.1 Purpose

The purpose of the frequency tolerance test is to characterize the sensitivity of the Tag to frequency. Tags that perform well over a large bandwidth are suitable for operation across regulatory regions and tend to be less prone to performance degradation when attached to materials. Frequency tolerance is the percentage of frequencies that the Tag range exceeds half of the maximum read range measured over the 860 to 960 MHz worldwide band; the higher the percentage, the more consistent the Tag's performance across regions.

8.3.2 Description

With the Tag positioned in the far-field of the transmit test antenna, the transmit power is varied until the Tag correctly responds with a 96-bit EPC 50% of the time as described in 8.1.2. This test is repeated at frequencies across the 860 to 960 MHz band. The transmit EIRPs, frequency and the distance to the Tag are used to determine the free space range at each frequency assuming a 35 dBm transmit EIRP. A frequency tolerance percentage is calculated by determining the portion of frequencies performing above half the maximum range. Figure 8-3 is a sample plot of read range verses frequency with the half-range threshold superimposed. Fourteen of the twenty one data points are greater than or equal to the half-range threshold, therefore the frequency tolerance is 67%.

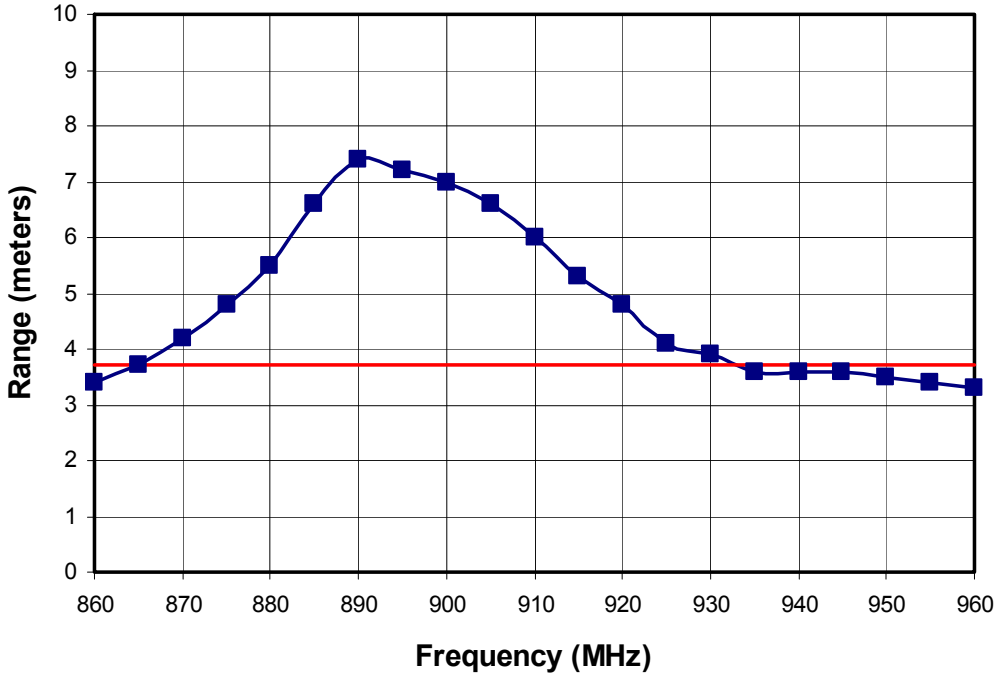

Figure 8-3 - Read range versus frequency

8.3.3 Procedure

1) Perform steps 1 through 6 in 8.1.3 except with frequency set to 860 MHz.
2) Repeat step 1 at frequency increments of 5 MHz until the 960 MHz frequency point is completed.

3) Plot range vs. frequency as shown in Figure 8-3 and determine the frequency sensitivity percentage according to the following expression.

$$\text{Frequency Tolerance (\%)} = \frac{\sum_{i=1}^{21} \mathrm{U}(f(\mathrm{i}))}{0.21}$$

Where:

$$\mathrm{U}(f(\mathrm{i})) = \begin{cases} 1 & R\mathrm{ange}(f(\mathrm{i})) \geq 0.5 * \max\left(R\mathrm{ange}(f(\mathrm{i}))\right) \\ 0 & R\mathrm{ange}(f(\mathrm{i})) < 0.5 * \max\left(Range(f(\mathrm{i}))\right) \end{cases}$$

$$f(\mathrm{i}) = \begin{bmatrix} 860 & 865 & \cdots & 955 & 960 \end{bmatrix}$$

$\mathrm{U}(f(\mathrm{i}))$ is the indicator function that flags when the TUT can be successfully inventoried at the qualifying range. The indicator function is unity at the frequencies where the range is at least half the maximum range and zero otherwise.

8.3.4 Reporting

The test report shall include the following information:

1. Location, time, conditions, and conductor of test
2. Description of TUT
3. Low-to-high, high-to-low, and mean EIRP for each TUT tested at each frequency
4. Read range for each TUT at each frequency
5. Plot of read range for each TUT vs. frequency
6. Frequency Tolerance percentage for each TUT
7. Ranking in descending order, determine the 90% Frequency Tolerance statistic per 5.1

The 90% Frequency Tolerance statistic shall be listed in Min column of the summary report (Table 4-1).

8.4 Interference Tolerance

8.4.1 Purpose

The purpose of the interference tolerance test is to characterize the tag's performance with interference present. Interference is common in a dense-reader environment or where asynchronous readers operate simultaneously across a portal. Interference tolerance is the ratio of desired-to-interfering Reader range at which the interfererless Tag range to the desired Reader is halved. For example, an interference tolerance of 50% indicates that the Tag can operate when an interfering Reader is positioned at twice the range as the desired Reader. An interference tolerance greater than 100% means the interfering Reader can be positioned closer to the Tag than the desired Reader. The reported interference tolerance assumes the desired and interfering Readers take the same path along the boresight of the Tag. Testing is performed at the center of the intended band of operation along the mechanical boresight of the Tag.

8.4.2 Description

The Tag is positioned in the far-field of the transmit test antenna and the transmit power is varied until the Tag correctly responds with a 96-bit EPC 50% of the time as described in 8.1.2. The transmit power is increased by 6 dB and an interfering continuous wave (CW) signal is summed with the desired signal just prior to the transmit antenna. The CW power is increased until the Tag correctly responds with a 96-bit EPC 50% of the time as be-

fore. The interference tolerance is determined from the dB difference between the desired and interfering transmit powers.

The test is run with the interfering signal at two different frequency offsets from desired signal. The closer interferer represents an adjacent FCC channel (50 channel frequency plan assumed), and the further interferer represents an alternate RFID high power ETSI channel (4 channel frequency plan assumed).

8.4.3 Procedure

1) Perform steps 1 through 6 in 8.1.3 with the interfering signal source off.
2) Increase the EIRP by 6 dB above the mean EIRP determined in step 6 in 8.1.3.
3) Set the interfering signal generator for CW transmission with an EIRP below the mean EIRP determined in step 6 in 8.1.3. Set the frequency 500 kHz higher than the transmitter frequency. Turn on the interfering signal generator.
4) Perform steps 1 through 6 in 8.1.3 as the interfering signal is increased or decreased in 0.25 dB increments. Record the interferer EIRP at which 50% read success occurs.
5) Repeat steps 3 and 4 for an interfering signal 1.2 MHz above the transmitter frequency.
6) Calculate the interference tolerance at each interfering offset using the following expression.

   $$\text{Interference Tolerance (\%)} = 100 * \left(1 - 10^{-|\Delta EIRP|/20}\right)$$

   Where:

   ΔEIRP is the difference between the interferer-less and interfering 50% success EIRP's in dB

8.4.4 Reporting

The test report shall include the following information:

1. Location, time, conditions, and conductor of test
2. Description of TUT
3. Low-to-high, high-to-low, and mean EIRP for each TUT tested under interfere-less conditions at each interfering frequency
4. ΔEIRP (difference between interferer-less and interfering mean EIRP's) at each interfering frequency
5. Interference Range Ratio at each interfering frequency
6. Ranking in descending order, determine the 90% Interference Range Ratio statistic at each frequency per 5.1

The 90% Interference Range Ratio statistic for each interfering frequency offset shall be listed in Min column of the summary report (Table 4-1).

8.5 Backscatter Range

8.5.1 Purpose

The purpose of the backscatter range test is to determine the strength of the Tag backscatter response. The backscatter strength is reported in terms of a reverse link range (meters) assuming a nominally sensitive Reader receiving the signal. Because read range (forward link range) and backscatter range (reverse link range) are represented in the same units, they can be contrasted. Reverse link range is typically greater than forward link range for Class 1 tags. The reported range is the reverse link range at the center of the intended band of operation along the mechanical boresight of the Tag assuming a Reader receiver with -70 dBm sensitivity using a 5 dBil gain antenna.

8.5.2 Description

With the Tag positioned in the far-field of the transmit antenna, the transmit power is varied until the Tag correctly

responds with a 96-bit EPC 50% of the time as described in 8.1. The transmit power is increased by 2 dB and the backscattered power at the receiver input is measured. The Backscatter Range is calculated assuming a Reader sensitivity of -70 dBm connected to a receive antenna with 5 dBil gain.

The reported range is the Tag backscatter range that is expected using a nominally sensitive Reader in an environment free of RF reflections, interference, and lossy materials. The range experienced using a Reader with a different sensitivity in a real-life environment may be less or greater than the reported nominal value.

8.5.3 Procedure

1) Perform steps 1 through 6 in 8.1.3.
2) Increase the transmit EIRP by 2 dB above the mean EIRP determined in step 6 of 8.1.3.
3) Set the receiver LO frequency equal to the transmit frequency with an output bandwidth of 1 MHz and complex sampling rate at least 50% higher than the bandwidth (*e.g.* at least 1.5 Msps for a bandwidth of 1 MHz).
4) Capture at least 10 symbols (250 µsec) of the backscattered preamble.
5) Determine the received backscatter power by measuring the complex IQ power and applying the receiver gain determined in 7.3.

   $$P_{Rx0} = P_{IQ0} - G_{Rx}$$

6) Calculate the Backscatter Range using the following expression:

   $$\text{Backscatter Range (meters)} = \left(10^{K/10}\right)^{1/4} \cdot r$$
   $$K = 110 + P_{Rx0} - EIRP_{Tx0} - G_{RxA0}$$

   Where:

   P_{Rx0} is the measured power at the Rx input at a transmit EIRP 2 dB above the read threshold in dBm

   $EIRP_{Tx0}$ is the transmit EIRP at 2 dB above the read threshold in dBm

   G_{RxA0} is the test set receiver antenna gain (linearly polarized) in dBil

   r is the range to the Tag in the test setup in meters

8.5.4 Reporting

The test report shall include the following information:

1. Location, time, conditions, and conductor of test
2. Description of TUT
3. EIRP value where measurement was taken for each TUT tested
4. Backscatter RIP for each TUT tested
5. Backscatter Range for each TUT tested
6. Ranking in descending order, determine the 90% Backscatter Range statistic per 5.1.

The 90% Backscatter Range statistic shall be listed in Min column of the summary report (Table 4-1).

8.6 Write Range

8.6.1 Purpose

The purpose of the write range test is to determine the write sensitivity of the Tag. The reported write range is the

nominal forward link range at which the Tag can be successfully written. Testing is performed at the center of the intended region of operation along the mechanical boresight of the Tag, assuming a 35 dBm Reader EIRP.

8.6.2 Description

With the Tag positioned in the far-field of the transmit test antenna, the transmit power is varied until the Tag is successfully written 50% of the time. For a success the Tag must 1) be successfully inventoried, returning its 96-bit EPC, 2) respond to a *Req_RN*, and 3) respond to the *Write* command with a zero error code within 20 msec.

A single 16-bit word shall be written to the EPC memory bank as defined in 5.4.2. To assure new data is written to the Tag, a different word value will be sent on the attempt following a success. The new word can be attempted until a success is achieved, then the test set should revert to the original word for the subsequent attempt. In this way, two words are sufficient for testing.

Once the 50% success point is found, the free space path loss to the Tag is used to determine the free space write range under the assumption of a 35 dBm transmit EIRP.

The reported range is the Tag range that is expected in an environment free of RF reflections, interference, and lossy materials. The range experienced in a real-life environment may be less or greater than the reported nominal value. A conversion table is provided in Annex A listing the relationship between range (meters), RIP at the Tag (dBm), and field strength at the Tag (volts/meter).

8.6.3 Procedure

1) Position the Tag Under Test (TUT) on the mast in the default orientation specified in 6.2.
2) Set the transmitter for an EIRP at the TUT read threshold. Set the frequency to the center of the intended operating band as defined in 5.4.3.
3) Repeatedly transmit the dense reader PR-ASK signal defined in 5.4.1 for writing and monitor the success rate. This includes a 96-bit inventory as defined for reading followed by *Req_RN* and *Write* commands.
4) Increase the transmit EIRP in 0.25 dB steps until the write success rate reaches 50%. Record the EIRP.
5) Increase the EIRP by 1 dB and decrease the EIRP in 0.25 dB steps until the a 50% success rate occurs. Record the EIRP.
6) Calculate the mean of the two EIRPs and use it to determine the nominal TUT write range assuming a 35 dBm EIRP using the following expression.

$$\text{Write Range (meters)} = r * 10^{\left(\frac{35-\overline{EIRP_{Tx}}}{20}\right)}$$

Where :

r is the range to the Tag in the test setup in meters

$\overline{EIRP_{Tx}}$ is the mean transmit EIRP in dBm

8.6.4 Reporting

The test report shall include the following information:

1. Location, time, conditions, and conductor of test
2. Description of TUT
3. Low-to-high, high-to-low, and mean EIRP for each TUT tested
4. Write Range for each TUT tested
5. Ranking in descending order, determine the 90% Write Range statistic per 5.1.

The 90% Write Range statistic shall be listed in Min column of the summary report (Table 4-1).

8.7 Write Time

8.7.1 Purpose

Many applications require rapid writing of data to the Tag. This test measures the time to complete a 16-bit word to EPC memory. Two conditions are tested, the write time when the memory is initialized to a zero value and when it is initialized to a non-zero value. Since most Class 1 Tags support a 96-bit EPC, the write time reported is the time to write a single word multiplied by six. This time is the minimum that could be achieved in practice using the dense-reader mode. Overhead associated with Reader and Tag communications and processing will extend the time slightly. Testing is performed at the center of the intended operation band along the mechanical boresight of the Tag.

Writing shall be attempted through the secured state following a successful inventory. An access password is not required, because it is set to zero in the default TUT configuration. The *Write* command shall be used to write a single word to location 20 hex in the EPC memory bank. If the memory is initialized with a non-zero value and the tag vendor specifies that the memory requires clearing (zeroing) prior to a write attempt, then the cumulative time to clear the memory and write a new non-zero value will measured and reported (see zero-initialized entry in Table 4-1). Shorter write times are desirable.

8.7.2 Description

With the Tag positioned in the far-field of the transmit test antenna, the transmit power is set 2 dB above the EIRP required to achieve a 50% probability of write success. Two scenarios are tested, writing a non-zero EPC when the TUT EPC memory contains zeros (is cleared), and writing a non-zero EPC when the TUT memory contains non-zeros. Some Tags may require clearing the memory prior to writing a new EPC. The time to complete this extra step is included in the total write time.

If the TUT requires memory clearing before a new non-zero EPC can be written then the TUT is inventoried and 96-bits of EPC memory are cleared using Gen 2 commands specified by the vendor. The time between the end of the first command and the start of the last Tag response acknowledging success is recorded (the clear time). The TUT is inventoried again, a *Req_RN* is sent followed by a *Write* command with a word targeted for memory address 20 hex. The time between the end of the *Write* command and the beginning of the preamble of an affirmative Tag response is measured (see Figure 8-4). If the write is unsuccessful, the write time is discarded, and the TUT is re-inventoried and the process repeated. Once the write is successful, the write time is recorded.

The time reported to complete a 96-bit write in a cleared Tag is calculated by multiplying the single-word write time by six. The time to write a non-cleared Tag is the cleared write time plus the time to clear the Tag. The cleared and non-cleared times are equal for Tags that can directly write a new EPC to a non-zero memory.

Figure 8-4 – Single-word write time definition

8.7.3 Procedure

1) Position the Tag Under Test (TUT) on the mast in the default orientation specified in 6.2.
2) Transmitting the dense reader PR-ASK signal defined in 5.4.1, set the transmitter for an EIRP 2 dB above the TUT write threshold. Set the frequency to the center of the intended regional operating band.
3) If the vendor has declared that TUT requires clearing, then clear 96 bits of EPC memory according to the command sequence specified by the vendor. Record the clear time as the time between the end of first write command and the start of the preamble of last Tag response acknowledging success. If clearing is not required, skip this step.
4) Attempt writing AFBE hex to EPC memory address 20 hex. This includes a 96-bit inventory as defined for reading followed by *Req_RN* and *Write* commands.
5) If step 4 does not result in a successful write, then repeat step 4 until write success is achieved.
6) Measure and record the single-word write time as defined in Figure 8-4 for the successful write.

7) Multiply the single-word write time by six and report this value as the Zero Initialized Write Time. Add the clear time (zero if Tag doesn't require clearing) to the Zero Initialized Write Time to determine the Non-zero Initialized Write Time.

8.7.4 Reporting

The test report shall include the following information:

1. Location, time, conditions, and conductor of test
2. Description of TUT
3. EIRP value where measurement was taken for each TUT tested
4. Single-word, clearing time, Zero Initialized Write Time, and Non-zero Initialized Write Time for each TUT tested
5. Read and Write Range for each TUT tested
6. Ranking in ascending order, determine the 90% 96-bit Write Time statistic per 5.1.

The 90% 96-bit Write Time statistic shall be listed in Max column of the summary report (Table 4-1).

8.8 Tag Proximity

8.8.1 Purpose

Tags in close proximity can exhibit degraded sensitivity. The read reliability for closely packed items can therefore be challenging. The purpose of the Tag Proximity test is to quantify this effect by determining the separation that reduces the Tag's maximum read range by half. The smallest separation is desirable.

8.8.2 Description

With the Tag positioned in the far-field of the transmit antenna, the transmit power is varied until the Tag correctly responds with a 96-bit EPC 50% of the time, just as in the read range test. The Tag is operated at the center frequency of the intended region of operation and oriented with its mechanical boresight aligned with that of the transmit antenna. A second Tag of the same type as the TUT is positioned collinear along the long dimension of the TUT. The second Tag is moved successively closer to TUT until the read range is halved. The final Tag separation is reported.

8.8.3 Procedure

1) Perform steps 1 through 6 in 8.1.3 with only the TUT on the mast.
2) Introduce a second Tag of the same type as the TUT mounted on the same material positioned above and collinear along the long dimension of the TUT. Start with a 10 cm separation.
3) Repeat step 1 with both Tags present. To prevent the second Tag from participating in the inventory round, send a *Select* command that selects on the TUT's EPC prior to the *Query* command.
4) If the new read range is more than half of the initial range, move the second Tag closer to the TUT. Repeat until the read range is halved. Half the read range corresponds to a 6 dB increase in transmit EIRP to successfully read the TUT.

8.8.4 Reporting

The test report shall include the following information:

1. Location, time, conditions, and conductor of test
2. Description of TUT
3. Low-to-high, high-to-low, and mean EIRP with only TUT in field for each TUT tested
4. Read range with only TUT in field for each TUT tested

5. Tag Proximity, defined as the Tag separation that results in half the original TUT read range
6. Ranking in ascending order, determine the 90% Tag Proximity statistic as per 5.1.

The 90% Tag Proximity statistic shall be listed in Max column of the summary report (Table 4-1).

Revision History

Date & Version Number	Section(s)	Change	Edited by
March 6, 2007 Version 1.0.0	All	Original document	V. Moretti
May 2, 2007 Version 1.0.1	All	Incorporated first round General Metrics working group comments	V. Moretti
June 10, 2007 Version 1.1.0	All	Incorporated second round General Metrics working group comments	V. Moretti
September 20, 2007 Version 1.1.1	All	Incorporated third round General Metrics working group comments	V. Moretti
January 8, 2008 Version 1.1.2	All	Grammar, punctuation, style, and unit edits	G. Ow-Yang

Annex A – Conversion Factors

Read and Write performance are expressed in terms of range (meters) in this document. Other units are commonly used to relate a Tag's performance. In particular, field strength (volts/meter) and Tag RIP or Tag sensitivity (dBm) capabilities are frequently used. The conversion table below is provided for translation between the various metrics.

The entries assume a Reader with antenna that transmit at a 35 dBm EIRP.

The field strength, E, is related to the forward link range, R, by:

$$E = \frac{\sqrt{30 * EIRP}}{R} = \frac{9.74}{R}$$

Where:

E is the electric field strength (V/m)
EIRP is 35 dBm transmit EIRP converted to watts (W)
R is Tag range determined from the procedures of this document (m)

Tag sensitivity, S, is related to the forward link range, R, by:

$$S = 35 - 20\log\left(\frac{4\pi fR}{c}\right)$$

Where:

S is the sensitivity (dBm)
f is the regional center frequency (Hz)
c is the speed of light (m/sec)
R is Tag range determined from the procedures of this document (m)

Table A-1 - Tag performance conversion table

Range (meters)	Field Stength (V/m)	Sensitivity (dBm) EU	NA	Japan		Range (meters)	Field Stength (V/m)	Sensitivity (dBm) EU	NA	Japan
1.0	9.74	3.8	3.3	3.0		9.5	1.03	-15.8	-16.2	-16.6
1.5	6.49	0.3	-0.2	-0.5		10.0	0.97	-16.2	-16.7	-17.0
2.0	4.87	-2.2	-2.7	-3.0		10.5	0.93	-16.6	-17.1	-17.4
2.5	3.90	-4.2	-4.6	-5.0		11.0	0.89	-17.0	-17.5	-17.9
3.0	3.25	-5.7	-6.2	-6.6		11.5	0.85	-17.4	-17.9	-18.2
3.5	2.78	-7.1	-7.6	-7.9		12.0	0.81	-17.8	-18.3	-18.6
4.0	2.44	-8.2	-8.7	-9.1		12.5	0.78	-18.1	-18.6	-19.0
4.5	2.16	-9.3	-9.7	-10.1		13.0	0.75	-18.5	-18.9	-19.3
5.0	1.95	-10.2	-10.6	-11.0		13.5	0.72	-18.8	-19.3	-19.6
5.5	1.77	-11.0	-11.5	-11.8		14.0	0.70	-19.1	-19.6	-19.9
6.0	1.62	-11.8	-12.2	-12.6		14.5	0.67	-19.4	-19.9	-20.3
6.5	1.50	-12.5	-12.9	-13.3		15.0	0.65	-19.7	-20.2	-20.5
7.0	1.39	-13.1	-13.6	-13.9		15.5	0.63	-20.0	-20.5	-20.8
7.5	1.30	-13.7	-14.2	-14.5		16.0	0.61	-20.3	-20.8	-21.1
8.0	1.22	-14.3	-14.7	-15.1		16.5	0.59	-20.5	-21.0	-21.4
8.5	1.15	-14.8	-15.3	-15.6		17.0	0.57	-20.8	-21.3	-21.6
9.0	1.08	-15.3	-15.8	-16.1		17.5	0.56	-21.1	-21.5	-21.9

Annex B– Orientation Tolerance Derivation

Orientation tolerance is a measure of read performance of a Tag as it is rotated left or right (in azimuth) or up and down (in elevation) relative to the Reader's transmit antenna. Imagine the Tag and Reader antenna connected by a string. Rotating the Tag is equivalent to swinging the Reader antenna, with the string taunt, to a new position on the surface of a sphere. If the Tag rotation is constrained by ± 90° in azimuth and elevation, then the Reader antenna is free to take a position on the surface of a half-sphere. Orientation tolerance is the percentage of the surface area of a half-sphere where the Tag's range is at least half its maximum range. This concept is similar to determining the percentage of land mass in the northern hemisphere on the earth's surface, where Tag ranges above half the peak range are like land masses above sea level.

One determines the qualifying surface area by integrating over the two-dimensional region where half-range or better performance is achieved, *f(θ,φ)*:

$$\Omega = \iint_{f(\theta,\phi)} \cos(\theta) d\theta d\phi$$

The qualifying area is then divided by the area of a unity radius half-sphere, 2π.

Orientation Tolerance percentage = 100 * $\Omega/(2\pi)$

The qualifying region is estimated in section 8.2 from a finite set of range samples collected on the principle azimuth and elevation axes. The derivation below defines the processing necessary to estimate the Orientation Tolerance percentage from the available data.

$$\text{Orientation Tolerance (\%)} = \frac{100 * \sum_{j=1}^{19}\sum_{i=1}^{19} \cos(\theta_{El}(i)) * U(\theta_{El}(i), \theta_{Az}(j))}{\max\left(Range(\theta_{El}(i), \theta_{Az}(j))\right) * \sum_{j=1}^{19}\sum_{i=1}^{19} \cos(\theta_{El}(i))}$$

$$= \frac{\sum_{j=1}^{19}\sum_{i=1}^{19} \cos(\theta_{El}(i)) * U(\theta_{El}(i), \theta_{Az}(j))}{2.1717 * \max\left(Range(\theta_{El}(i), \theta_{Az}(j))\right)}$$

Where:

$$U(\theta_{El}(i), \theta_{Az}(j)) = \begin{cases} 1 & Range(\theta_{El}(i), \theta_{Az}(j)) \geq 0.5 * \max\left(Range(\theta_{El}(i), \theta_{Az}(j))\right) \\ 0 & Range(\theta_{El}(i), \theta_{Az}(j)) < 0.5 * \max\left(Range(\theta_{El}(i), \theta_{Az}(j))\right) \end{cases}$$

$$\theta_{El}(i) = \begin{bmatrix} -90 & -80 & \cdots & 80 & 90 \end{bmatrix}$$
$$\theta_{Az}(j) = \begin{bmatrix} -90 & -80 & \cdots & 80 & 90 \end{bmatrix}$$
$$Range(\theta_{El}(i), \theta_{Az}(j)) = Range(\theta_{El}(i)) * Range(\theta_{Az}(j))$$

$U(\theta_{El}(i), \theta_{Az}(j))$ is the indicator function that flags when the TUT can be successfully inventoried at the qualifying range. The indicator function is unity at the orientation angles where the range metric is at least half the maximum range metric and zero otherwise.

The following procedure uses hypothetical data to illustrate an Orientation Tolerance calculation.

Our main task is to determine the surface area subtended by the region in which the read range is at least half the maximum read range. We report this region in terms of a percentage, the portion of the total possible area, which is the area of a half-sphere.

There are several steps to determine the Orientation Tolerance percentage from range data collected along the azimuth and elevation axes.

1. Generate a grid of range metrics versus azimuth and elevation angles from range data taken on the principle axes
2. Determine the set of angles over which the range metric is at least half the maximum range metric and the surface area subtended by these angles
3. Divide the qualifying surface area determined in step 3 by the surface area of a half-sphere to determine the Orientation Tolerance percentage

Step 1: Generate the grid of range metrics versus azimuth and elevation angles from range data taken on the principle axes

We assume the Tag antenna gains that determine the azimuth and elevation ranges are independent so that the ranges can be multiplied to create a grid of range metrics. The range metric in a particular direction (θ_{Az}, θ_{El}) is the product of the ranges measured at each orientation. The range metric is merely an intermediate result and is not the actual expected range in a direction.

A range metric grid is shown in Figure B-1 for a set of hypothetical azimuth and elevation range data. The maximum range metric is 55.54 and occurs at (20°, 0°).

Step 2: Determine the set of angles over which the range metric is at least half the maximum range metric and the surface area subtended by these angles

Entries in Figure B-2 are zero if the range metric in Figure B-2 is less that 55.54/2. If the metric is above threshold, then the cosine of the elevation angle is entered. The weighed area above half-range (last row) is the sum of the resulting columns. The surface area subtended by the angles achieving half-range performance is the sum of the weighted area above half-range values, 114.26 in the example. The surface area result is actually a scaled version of the unity radius surface area because we are summing rather than integrating. The scale factor will cancel out in step 3 because we use a half-sphere surface area determined from a similar summation.

Step 3: Divide the qualifying surface area determined in step 3 by the surface area of a half-sphere to determine the Orientation Tolerance percentage

The half-sphere surface area that results from a summation of the specified angle samples is 217.17. The Orientation Tolerance percentage for the Tag in this example is therefore:

Orientation Tolerance percentage = 100*114.26/217.17 = 52.6 %

	Elevation Angle	-90	-80	-70	-60	-50	-40	-30	-20	-10	0	10	20	30	40	50	60	70	80	90
	El range (m)	3.73	3.74	3.93	4.33	5.03	5.61	6.26	6.63	7.05	7.49	7.06	7.06	6.29	5.56	4.95	4.05	3.86	3.67	3.49
Azimuth Angle	Az range (m)																			
-90	0.85	3.16	3.16	3.33	3.67	4.26	4.75	5.30	5.61	5.97	6.34	5.98	5.98	5.33	4.71	4.20	3.43	3.27	3.11	2.96
-80	1.27	4.76	4.76	5.00	5.52	6.41	7.15	7.98	8.45	8.98	9.55	9.00	9.00	8.02	7.09	6.32	5.16	4.93	4.68	4.45
-70	1.80	6.71	6.71	7.05	7.78	9.03	10.07	11.23	11.90	12.65	13.45	12.68	12.67	11.29	9.98	8.90	7.26	6.94	6.60	6.27
-60	2.91	10.87	10.87	11.42	12.61	14.63	16.32	18.20	19.28	20.50	21.79	20.54	20.54	18.30	16.18	14.42	11.77	11.24	10.69	10.16
-50	4.49	16.78	16.79	17.64	19.47	22.60	25.20	28.12	29.78	31.67	33.65	31.72	31.72	28.26	24.98	22.27	18.18	17.36	16.51	15.69
-40	5.33	19.90	19.90	20.92	23.08	26.79	29.88	33.33	35.30	37.54	39.89	37.61	37.61	33.50	29.62	26.40	21.56	20.59	19.57	18.60
-30	5.98	22.35	22.35	23.49	25.93	30.09	33.56	37.44	39.65	42.16	44.80	42.24	42.23	37.63	33.26	29.65	24.21	23.12	21.98	20.89
-20	6.45	24.07	24.08	25.30	27.93	32.41	36.15	40.33	42.71	45.42	48.26	45.50	45.49	40.53	35.83	31.93	26.08	24.90	23.67	22.50
-10	6.86	25.64	25.64	26.95	29.74	34.52	38.50	42.95	45.48	48.37	51.40	48.46	48.45	43.17	38.16	34.01	27.77	26.52	25.21	23.97
0	7.21	26.94	26.94	28.31	31.25	36.27	40.44	45.12	47.78	50.82	54.00	50.91	50.90	45.35	40.09	35.73	29.18	27.86	26.49	25.18
10	7.40	27.63	27.63	29.04	32.05	37.20	41.48	46.28	49.01	52.12	55.39	52.22	52.21	46.52	41.12	36.65	29.93	28.58	27.17	25.83
20	7.42	27.70	27.71	29.12	32.14	37.30	41.60	46.41	49.15	52.27	55.54	52.36	52.35	46.64	41.23	36.75	30.01	28.66	27.24	25.90
30	7.17	26.76	26.77	28.13	31.05	36.04	40.19	44.83	47.48	50.50	53.66	50.59	50.58	45.06	39.84	35.50	28.99	27.69	26.32	25.02
40	6.51	24.32	24.32	25.56	28.21	32.75	36.52	40.74	43.15	45.89	48.76	45.97	45.96	40.95	36.20	32.26	26.35	25.16	23.92	22.74
50	5.69	21.26	21.27	22.35	24.67	28.63	31.93	35.62	37.72	40.12	42.63	40.19	40.19	35.80	31.65	28.21	23.03	22.00	20.91	19.88
60	4.57	17.05	17.05	17.92	19.78	22.96	25.60	28.56	30.25	32.17	34.18	32.23	32.22	28.71	25.38	22.62	18.47	17.64	16.77	15.94
70	2.82	10.54	10.54	11.08	12.23	14.19	15.82	17.65	18.70	19.88	21.13	19.92	19.92	17.74	15.69	13.98	11.42	10.90	10.36	9.85
80	1.80	6.71	6.71	7.05	7.78	9.03	10.07	11.23	11.90	12.65	13.45	12.68	12.67	11.29	9.98	8.90	7.26	6.94	6.60	6.27
90	1.15	4.30	4.30	4.52	4.98	5.78	6.45	7.20	7.62	8.11	8.61	8.12	8.12	7.23	6.40	5.70	4.65	4.44	4.23	4.02

Figure B-1 - Sample range metric grid

Elevation Angle:	90	80	70	60	50	40	30	20	10	0	-10	-20	-30	-40	-50	-60	-70	-80	-90
Azimuthal Angle																			
90	0.00	0.00	0.00	0.00	0.00	0.00	0.00	0.00	0.00	0.00	0.00	0.00	0.00	0.00	0.00	0.00	0.00	0.00	0.00
80	0.00	0.00	0.00	0.00	0.00	0.00	0.00	0.00	0.00	0.00	0.00	0.00	0.00	0.00	0.00	0.00	0.00	0.00	0.00
70	0.00	0.00	0.00	0.00	0.00	0.00	0.00	0.00	0.00	0.00	0.00	0.00	0.00	0.00	0.00	0.00	0.00	0.00	0.00
60	0.00	0.00	0.00	0.00	0.00	0.00	0.00	0.00	0.00	0.00	0.00	0.00	0.00	0.00	0.00	0.00	0.00	0.00	0.00
50	0.00	0.00	0.00	0.00	0.00	0.00	0.87	0.94	0.98	1.00	0.98	0.94	0.87	0.00	0.00	0.00	0.00	0.00	0.00
40	0.00	0.00	0.00	0.00	0.00	0.77	0.87	0.94	0.98	1.00	0.98	0.94	0.87	0.77	0.00	0.00	0.00	0.00	0.00
30	0.00	0.00	0.00	0.00	0.64	0.77	0.87	0.94	0.98	1.00	0.98	0.94	0.87	0.77	0.64	0.00	0.00	0.00	0.00
20	0.00	0.00	0.00	0.50	0.64	0.77	0.87	0.94	0.98	1.00	0.98	0.94	0.87	0.77	0.64	0.00	0.00	0.00	0.00
10	0.00	0.00	0.00	0.50	0.64	0.77	0.87	0.94	0.98	1.00	0.98	0.94	0.87	0.77	0.64	0.50	0.00	0.00	0.00
0	0.00	0.00	0.34	0.50	0.64	0.77	0.87	0.94	0.98	1.00	0.98	0.94	0.87	0.77	0.64	0.50	0.34	0.00	0.00
-10	0.00	0.00	0.34	0.50	0.64	0.77	0.87	0.94	0.98	1.00	0.98	0.94	0.87	0.77	0.64	0.50	0.34	0.00	0.00
-20	0.00	0.00	0.34	0.50	0.64	0.77	0.87	0.94	0.98	1.00	0.98	0.94	0.87	0.77	0.64	0.50	0.34	0.00	0.00
-30	0.00	0.00	0.34	0.50	0.64	0.77	0.87	0.94	0.98	1.00	0.98	0.94	0.87	0.77	0.64	0.50	0.00	0.00	0.00
-40	0.00	0.00	0.00	0.50	0.64	0.77	0.87	0.94	0.98	1.00	0.98	0.94	0.87	0.77	0.64	0.00	0.00	0.00	0.00
-50	0.00	0.00	0.00	0.00	0.64	0.77	0.87	0.94	0.98	1.00	0.98	0.94	0.87	0.77	0.64	0.00	0.00	0.00	0.00
-60	0.00	0.00	0.00	0.00	0.00	0.00	0.87	0.94	0.98	1.00	0.98	0.94	0.87	0.00	0.00	0.00	0.00	0.00	0.00
-70	0.00	0.00	0.00	0.00	0.00	0.00	0.00	0.00	0.00	0.00	0.00	0.00	0.00	0.00	0.00	0.00	0.00	0.00	0.00
-80	0.00	0.00	0.00	0.00	0.00	0.00	0.00	0.00	0.00	0.00	0.00	0.00	0.00	0.00	0.00	0.00	0.00	0.00	0.00
-90	0.00	0.00	0.00	0.00	0.00	0.00	0.00	0.00	0.00	0.00	0.00	0.00	0.00	0.00	0.00	0.00	0.00	0.00	0.00
Cosine angle weighting	0.00	0.17	0.34	0.50	0.64	0.77	0.87	0.94	0.98	1.00	0.98	0.94	0.87	0.77	0.64	0.50	0.34	0.17	0.00
Weighted area above half-range	0.00	0.00	1.37	3.50	5.79	7.66	10.39	11.28	11.82	12.00	11.82	11.28	10.39	7.66	5.79	2.50	1.03	0.00	0.00

Figure B-2 - Half-range grid with cosine weighting

Annex C– Backscatter Range Derivation

Backscatter range is a measure of the strength of the backscatter of a Tag. Describing this parameter in terms of range is convenient because the backscatter range can be compared to the forward link range (read range). If the backscatter range is larger than the read range then the Tag will be forward link limited in most applications. The backscatter range assumes a transmit EIRP of 35 dBm and a Reader receiver sensitivity of -70 dBm. Following is a derivation of the expression that defines Backscatter Range in terms of these assumed conditions and test power levels.

The (two-way) radar equation is

$$P_{Rx} = \frac{P_{Tx} G_{TxA} G_{RxA} \lambda^2 \sigma}{(4\pi)^3 R^4}$$ **Equation 1**

Where:

P_{Rx} = Power at output of receive antenna (watts)

P_{Tx} = Power into transmit antenna (watts)

G_{TxA} = Transmit antenna gain

G_{RxA} = Receive antenna gain

λ = Carrier wavelength (meters)

σ = Tag's Radar Cross Section (RCS) (meters^2)

R = Distance from Reader to Tag (meters)

If we know transmitter EIRP, receiver RIP and the Tag's RCS, range comes directly from Equation 1.

$$R = \left(\frac{P_{Tx} G_{TxA} G_{RxA} \lambda^2 \sigma}{(4\pi)^3 P_{Rx}} \right)^{1/4}$$ **Equation 2**

The Tag's RCS can be determined in the test setup using measurements of receiver RIP and transmitter EIRP and solving Equation 1.

$$\sigma = \frac{P_{Rx0} (4\pi)^3 r^4}{P_{Tx0} G_{TxA0} G_{RxA0} \lambda^2}$$ **Equation 3**

Where:

P_{Tx0} = Test transmit power (peak CW power as defined in 7.2) (watts)

P_{Rx0} = Test receive signal power (average backscatter power as defined in 7.3) (watts)

G_{TxA0} = Test set transmit antenna gain

G_{RxA0} = Test set receive antenna gain

r = Distance to the Tag in the test setup (meters)

Next, range is computed using Equation 2 with P_{Rx0} set equal to the assumed Reader sensitivity S_{min} (watts) and tag RCS computed from Equation 3.

$$R = \left(\frac{P_{Tx} G_{TxA} G_{RxA} \lambda^2}{(4\pi)^3 S_{\min}} \cdot \frac{P_{Rx0} (4\pi)^3 r^4}{P_{Tx0} G_{TxA0} G_{RxA0} \lambda^2} \right)^{1/4}$$ **Equation 4**

Canceling terms and expressing in terms of EIRP's

$$R = \left(\frac{EIRP_{Tx} G_{RxA} P_{Rx0}}{EIRP_{Tx0} G_{RxA0} S_{\min}} \right)^{1/4} r$$ **Equation 5**

If all power values are expressed in dBm, then Equation 5 becomes

$$K = EIRP_{Tx\_dBm} - EIRP_{Tx0\_dBm} + G_{RxA\_dB} - G_{RxA0\_dB} + P_{Rx0\_dBm} - S_{\min\_dBm}$$
$$R = \left(10^{K/10}\right)^{1/4} \cdot r$$ **Equation 6**

Assuming a transmit EIRP of 35 dBm, a Reader receiver sensitivity of -70 dBm, a Reader receive antenna gain of 5 dBil, equation 6 can be rewritten as

$$K = 35 - EIRP_{Tx0\_dBm} + 5 - G_{RxA0\_dBm} + P_{Rx0\_dBm} - (-70)$$
$$K = 110 + P_{Rx0\_dBm} - EIRP_{Tx0\_dBm} - G_{RxA0\_dBm}$$ **Equation 7**
$$R = \left(10^{K/10}\right)^{1/4} \cdot r$$

Where $EIRP_{Tx0\_dBm}$ is the transmit EIRP and P_{Rx0_dBm} is the associated receive power measured during test and G_{Rx0A_dBm} is the linearly polarized gain of the test set receiver antenna.