EANCOM® 2002 S4

OSTRPT

Order status report message

Edition 2016 Upd. 2021

1. Introduction 2
2. Message Structure Chart 3
3. Branching Diagram 4
4. Segments Description 10
5. Segments Layout 13
6. Example(s) 58

1. Introduction

Status

MESSAGE TYPE	: OSTRPT
REFERENCE DIRECTORY	: D.01B
EANCOM® SUBSET VERSION	: 005

Definition

A message by means of which a seller or seller's agent reports status information on an order. This message may be sent as a reply to an order status enquiry sent by a buyer or buyer's agent or a report sent at regular intervals as agreed by the parties.

Principles

The message may relate to:

- one enquiry;
- one or more orders (ORDERS), cargo/goods handling and movement (HANMOV), or instruction to despatch (INSDES) messages.
- one or more products on one or more orders.

The status can not trigger any action by the receiver of the message. For example, if the status is "ready for shipment", it can not be used to transmit despatch advice information. In this instance a DESADV message must also be sent.

The message can not be used to change anything except the status as previously reported. If information specific to the order, e.g. quantity ordered, is to be changed then in this instance an ORDRSP message must be sent.

The message may also be used to report on the status of a previously sent Cargo/Goods Handling and Movement message (HANMOV) by a logistics service provider acting on behalf of a supplier or buyer, and/or to report on the status of a previously sent Instruction to Despatch message (INSDES) exchanged between two trading partners.

2. Message Structure Chart

UNA		1	C	1	- Service string advice
UNB		2	M	1	- Interchange header

Order Status Report Heading Section

UNH		3	M	1	- Message header
BGM		4	M	1	- Beginning of message
DTM		5	M	5	- Date/time/period
RFF		6	C	1	- Reference
FTX		7	C	99	- Free text
SG1			M	99	- NAD-LOC-SG2
NAD		8	M	1	- Name and address
LOC		9	C	999	- Place/location identification
SG2			C	5	- CTA-COM
CTA		10	M	1	- Contact information
COM		11	C	5	- Communication contact

Order Status Report Detail Section

SG3			M	999	- DOC-DTM-SG4-SG6
DOC		12	M	1	- Document/message details
DTM		13	C	5	- Date/time/period
SG4	*		C	99	- STS-DTM-PCD-SG5
STS		14	M	1	- Status
DTM		15	C	5	- Date/time/period
PCD		16	C	1	- Percentage details
SG5	+		C	99	- NAD
NAD		17	M	1	- Name and address
SG6			C	999999	- LIN-PIA-IMD-SG7-SG8-SG16
LIN		18	M	1	- Line item
PIA		19	C	99	- Additional product id
IMD		20	C	99	- Item description
SG7			C	999	- RFF-DTM
RFF		21	M	1	- Reference
DTM		22	C	1	- Date/time/period
SG8	*		C	99	- STS-DTM-PCD-QTY-SG9
STS		23	M	1	- Status
DTM		24	C	5	- Date/time/period
PCD		25	C	1	- Percentage details
QTY	+	26	C	1	- Quantity
SG9	+		C	99	- NAD
NAD		27	M	1	- Name and address
SG16	+		C	99	- SCC-SG17
SCC	+	28	M	1	- Scheduling conditions
SG17	+		C	99	- LOC-DTM-QTY
LOC	+	29	M	1	- Place/location identification
DTM	+	30	C	5	- Date/time/period
QTY	+	31	C	1	- Quantity

Order Status Report Summary Section

UNT		32	M	1	- Message trailer
UNZ		33	M	1	- Interchange trailer

3. Branching Diagram

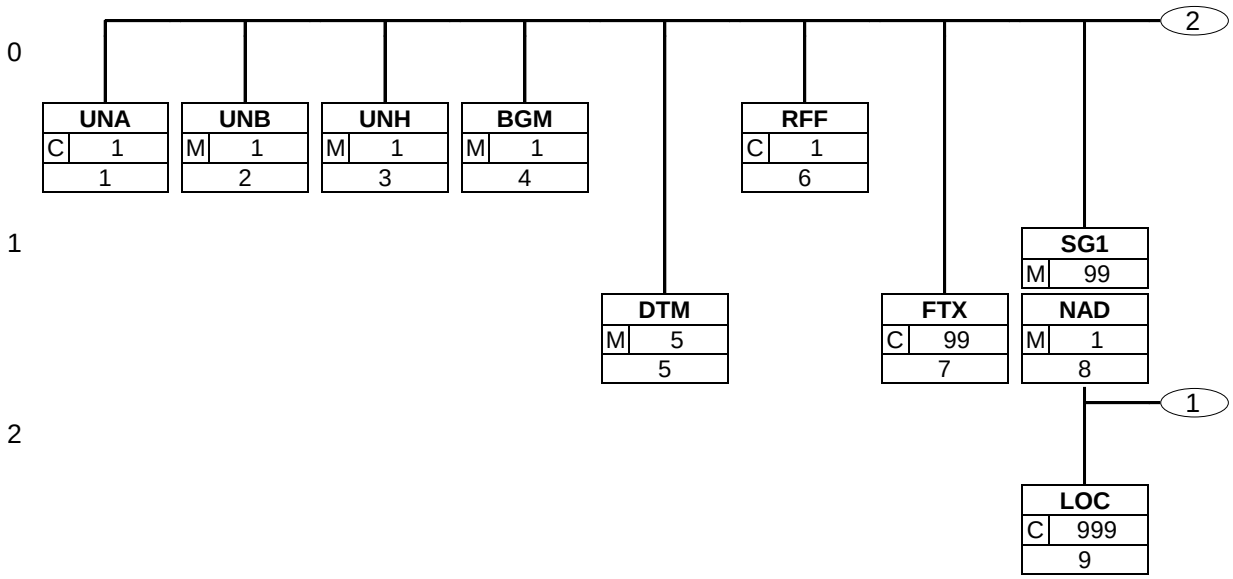

3. Branching Diagram

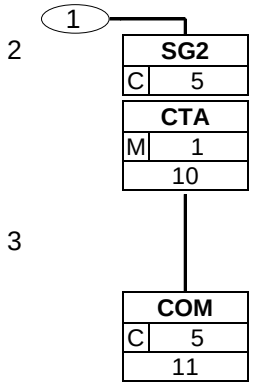

3. Branching Diagram

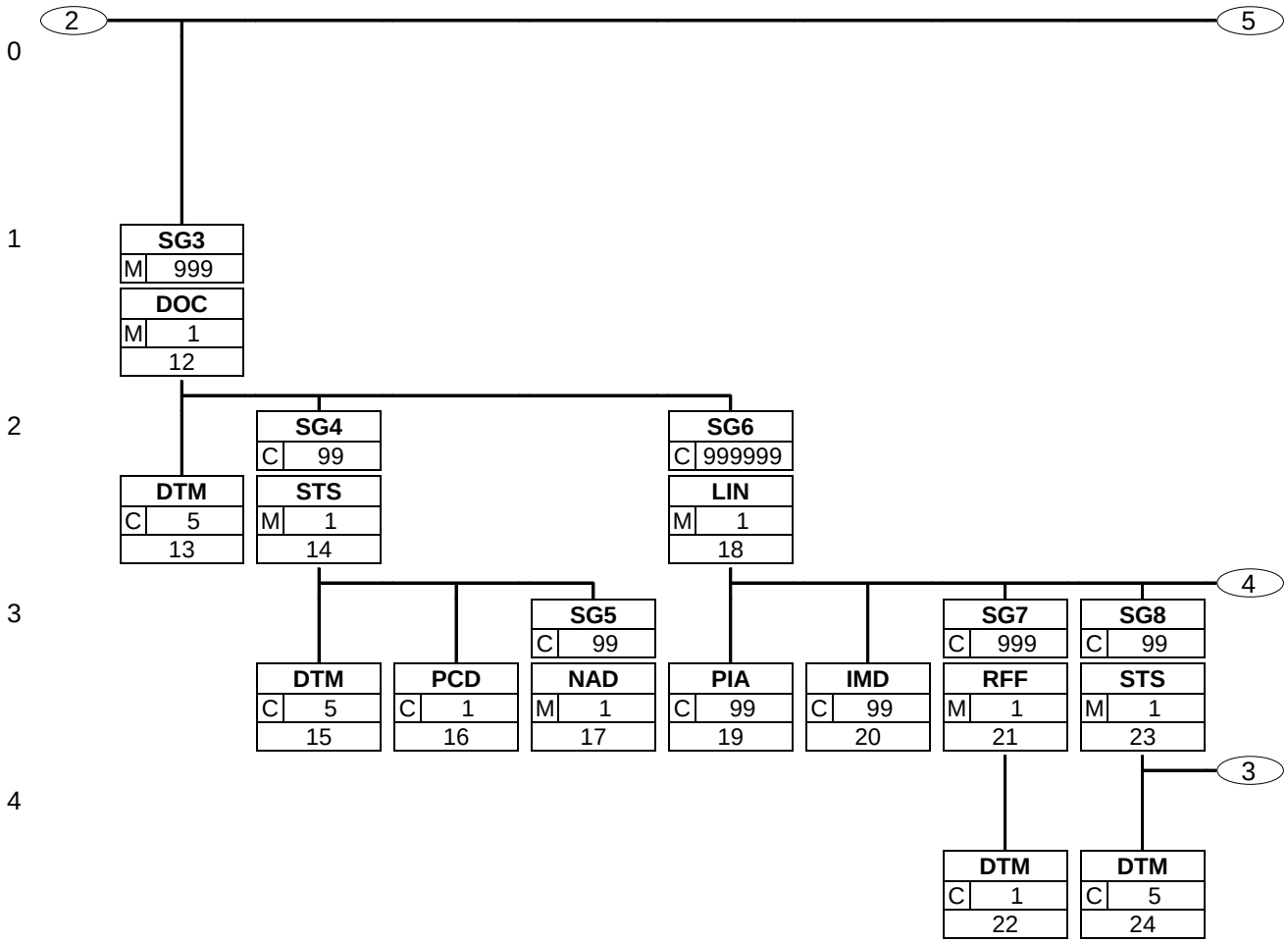

3. Branching Diagram

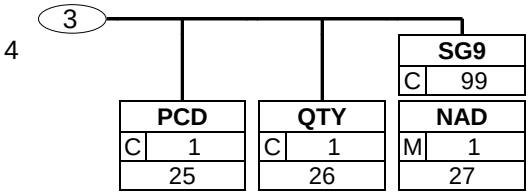

3. Branching Diagram

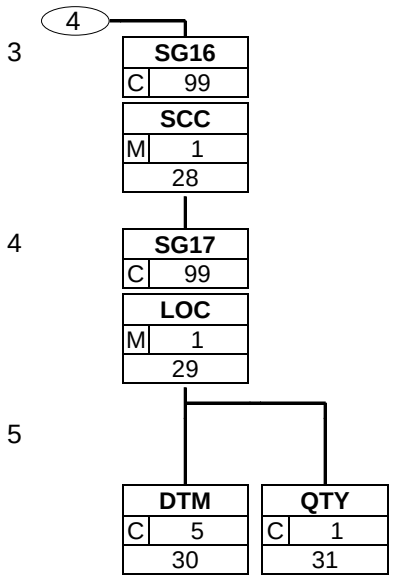

3. Branching Diagram

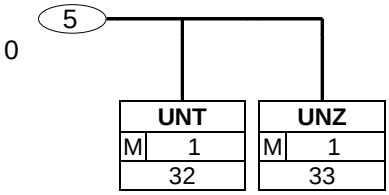

4. Segments Description

UNA - C 1 - Service string advice

This segment is used to inform the receiver of the interchange that a set of service string characters which are different to the default characters are being used.

UNB - M 1 - Interchange header

This segment is used to envelope the interchange, as well as to identify both, the party to whom the interchange is sent and the party who has sent the interchange. The principle of the UNB segment is the same as a physical envelope which covers one or more letters or documents, and which details, both the address where delivery is to take place and the address from where the envelope has come.

Order Status Report Heading Section

UNH - M 1 - Message header

This segment is used to head, identify and specify a message.

BGM - M 1 - Beginning of message

This segment is used to indicate the type and function of a message and to transmit the identifying number.

DTM - M 5 - Date/time/period

This segment is used to specify the date of the order status report message.

RFF - C 1 - Reference

This segment is used to identify the order status enquiry message which is being responded to.

FTX - C 99 - Free text

This segment is used to provide free form or coded text information which applies to the complete order status report message.

SG1 - M 99 - **NAD-LOC-SG2**

A group of segments identifying the parties with associated information.

NAD - M 1 - Name and address

This segment is used to identify the parties involved in the order status report message. Identification of the buyer, or buyer's agent, and the supplier, or supplier's agent, is mandatory in the order status report message. A logistic service provider may act as an agent of a buyer or a supplier.

LOC - C 999 - Place/location identification

This segment is used to identify locations related to the party specified in the NAD segment.
It is recommended that Global Location Numbers GLN - Format n13 - be used for the identification of all locations.

SG2 - C 5 - **CTA-COM**

A group of segments giving contact details of the specific person or department within the party identified in the NAD segment.

CTA - M 1 - Contact information

This segment is used to identify a contact department and/or person within the party specified in the NAD.

COM - C 5 - Communication contact

This segment is used to identify the communications number and the type of communications used for the department or person identified in the CTA segment.

Order Status Report Detail Section

SG3 - M 999 - **DOC-DTM-SG4-SG6**

A group of segments providing details of the individual order(s).

4. Segments Description

DOC	- M	1	- Document/message details This segment is used to identify the document(s) for which status information is being provided.
DTM	- C	5	- Date/time/period This segment is used to specify dates relating to the references given in the previous DOC segment.
SG4	- C	99	- **STS-DTM-PCD-SG5** A group of segments providing status details related to the individual order.
STS	- M	1	- Status This segment is used to provide status information related to the currently referenced document.
DTM	- C	5	- Date/time/period This segment is used to specify dates relating to the current status.
PCD	- C	1	- Percentage details This segment is used to specify percentage complete figures related to the current order being reported upon.
SG5	- C	99	- **NAD** This segment group is used to specify name and address related to the status of the current document.
NAD	- M	1	- Name and address This segment is used to identify any parties related to the current status being reported.
SG6	- C	999999	- **LIN-PIA-IMD-SG7-SG8-SG16** A group of segments providing details of the individual order(s) lines being reported.
LIN	- M	1	- Line item This segment is used to identify a product on an order for which status information is being provided.
PIA	- C	99	- Additional product id This segment is used to specify additional or substitutional item identification codes such as a buyer's or supplier's item number.
IMD	- C	99	- Item description This segment is used to describe the current line item.
SG7	- C	999	- **RFF-DTM** A group of segments giving references related to the order line(s) and, where relevant, their dates.
RFF	- M	1	- Reference This segment is used to provide any references related to the current line item.
DTM	- C	1	- Date/time/period This segment is used to specify dates relating to the references given in the previous RFF segment.
SG8	- C	99	- **STS-DTM-PCD-QTY-SG9** A group of segments providing status details and related information for a line item.
STS	- M	1	- Status This segment is used to provide status information related to the current line item.
DTM	- C	5	- Date/time/period This segment is used to specify dates relating to the current status.

4. Segments Description

PCD - C 1 - Percentage details

This segment is used to specify percentage complete figures related to the status of the current line item.

QTY - C 1 - Quantity

This segment is used to specify quantities related to the current status.

SG9 - C 99 - **NAD**

This segment group is used to specify name and address related to the status of the current line item.

NAD - M 1 - Name and address

This segment is used to identify any parties related to the status being provided.

SG16 - C 99 - **SCC-SG17**

A group of segments specifying the delivery schedules and related locations, quantities and dates/times.

SCC - M 1 - Scheduling conditions

This segment is used to indicate any delivery schedules for the current line item. As the SCC segment (SG16) is the trigger of the following segment group, its use is mandatory, if one of the following segments (SG17) shall be used.

SG17 - C 99 - **LOC-DTM-QTY**

A group of segments providing quantity details and related dates/times.

LOC - M 1 - Place/location identification

This segment is used to identify locations related to the quantity specified in the QTY segment. As the LOC segment is the trigger of this segment group, its use is mandatory, if one of the following segments shall be used.

DTM - C 5 - Date/time/period

This segment is used to specify any dates and or times related to the segment group.

QTY - C 1 - Quantity

This segment is used to specify quantities related to the current location.

Order Status Report Summary Section

UNT - M 1 - Message trailer

This segment is a mandatory UN/EDIFACT segment. It must always be the last segment in the message.

UNZ - M 1 - Interchange trailer

This segment is used to provide the trailer of an interchange.

5. Segments Layout

This section describes each segment used in the EANCOM® Order status report message. The original EDIFACT segment layout is listed. The appropriate comments relevant to the EANCOM® subset are indicated.

Notes:

1. The segments are presented in the sequence in which they appear in the message. The segment or segment group tag is followed by the (M)andatory / (C)onditional indicator, the maximum number of occurrences and the segment description.

2. Reading from left to right, in column one, the data element tags and descriptions are shown, followed by in the second column the EDIFACT status (M or C), the field format, and the picture of the data elements. These first pieces of information constitute the original EDIFACT segment layout.

   Following the EDIFACT information, EANCOM® specific information is provided in the third, fourth, and fifth columns. In the third column a status indicator for the use of (C)onditional EDIFACT data elements (see 2.1 through 2.3 below), in the fourth column the restricted indicator (see point 3 on the following page), and in the fifth column notes and code values used for specific data elements in the message.

2.1 (M)andatory data elements in EDIFACT segments retain their status in EANCOM®.

2.2 Additionally, there are five types of status for data elements with a (C)onditional EDIFACT status, whether for simple, component or composite data elements. These are listed below and can be identified when relevant by the following abbreviations:

- REQUIRED	**R**	Indicates that the entity is required and must be sent.
- ADVISED	**A**	Indicates that the entity is advised or recommended.
- DEPENDENT	**D**	Indicates that the entity must be sent in certain conditions, as defined by the relevant explanatory note.
- OPTIONAL	**O**	Indicates that the entity is optional and may be sent at the discretion of the user.
- NOT USED	**N**	Indicates that the entity is not used and should be omitted.

2.3 If a composite is flagged as **N, NOT USED**, all data elements within that composite will have blank status indicators assigned to them.

3. Status indicators detailed in the fourth column which directly relate to the code values detailed in the fifth **column** may have two values:

- RESTRICTED	*****	A data element marked with an asterisk (*) in the fourth column indicates that the listed codes in column five are the only codes available for use with this data element, in this segment, in this message.
- OPEN		All data elements where coded representation of data is possible and a restricted set of code values is not indicated are open (no asterisk in fourth column). The available codes are listed in the EANCOM® Data Elements and Code Sets Directory. Code values may be given as examples or there may be a note on the format or type of code to be used.

4. Different colours are used for the code values in the segment details: restricted codes are in red and open codes in blue.

5. Segments Layout

Segment number: 1

UNA	- C	1 - Service string advice

Function:

The service string advice shall begin with the upper case characters UNA immediately followed by six characters in the order shown below. The space character shall not be used in positions 010, 020, 040, 050 or 060. The same character shall not be used in more than one position of the UNA.

		EDIFACT	GS1	*	Description
UNA1	Component data element separator	M an1	**M**	*	Used as a separator between component data elements contained within a composite data element (default value: ":")
UNA2	Data element separator	M an1	**M**	*	Used to separate two simple or composite data elements (default value: "+")
UNA3	Decimal mark	M an1	**M**	*	Used to indicate the character used for decimal notation (default value:".")
UNA4	Release character	M an1	**M**	*	Used to restore any service character to its original specification (value: "?").
UNA5	Repetition separator	M an1	**M**	*	Used to indicate the character used for repetition separation (value: " * ").
UNA6	Segment terminator	M an1	**M**	*	Used to indicate the end of segment data (default value: " ' ")

Segment Notes:

This segment is used to inform the receiver of the interchange that a set of service string characters which are different to the default characters are being used.
When using the default set of service characters, the UNA segment need not be sent. If it is sent, it must immediately precede the UNB segment and contain the four service string characters (positions UNA1, UNA2, UNA4 and UNA6) selected by the interchange sender.
Regardless of whether or not all of the service string characters are being changed every data element within this segment must be filled, (i.e., if some default values are being used with user defined ones, both the default and user defined values must be specified).
When expressing the service string characters in the UNA segment, it is not necessary to include any element separators.
The use of the UNA segment is required when using a character set other than level A.
UNA:+.?*'

5. Segments Layout

Segment number: 2

UNB - M 1 - Interchange header

Function:

To identify an interchange.

Notes:
1. S001/0002, shall be '4' to indicate this version of the syntax.
2. The combination of the values carried in data elements S002, S003 and 0020 shall be used to identify uniquely the interchange, for the purpose of acknowledgement.

		EDIFACT	GS1	*	Description
S001	SYNTAX IDENTIFIER	M	**M**		See Part I chapter 5.2.7 and segment notes.
0001	Syntax identifier	M a4	**M**	*	UNOA = UN/ECE level A UNOB = UN/ECE level B UNOC = UN/ECE level C UNOD = UN/ECE level D UNOE = UN/ECE level E UNOF = UN/ECE level F UNOG = UN/ECE level G UNOH = UN/ECE level H UNOI = UN/ECE level I UNOJ = UN/ECE level J UNOK = UN/ECE level K UNOW = UN/ECE level W UNOX = UN/ECE level X UNOY = UN/ECE level Y
0002	Syntax version number	M an1	**M**	*	4 = Version 4
0080	Service code list directory version number	C an..6	**N**		
0133	Character encoding, coded	C an..3	**N**		
S002	INTERCHANGE SENDER	M	**M**		
0004	Interchange sender identification	M an..35	**M**		GLN (n13)
0007	Identification code qualifier	C an..4	**R**	*	14 = GS1
0008	Interchange sender internal identification	C an..35	**O**		
0042	Interchange sender internal sub-identification	C an..35	**N**		
S003	INTERCHANGE RECIPIENT	M	**M**		
0010	Interchange recipient identification	M an..35	**M**		GLN (n13)
0007	Identification code qualifier	C an..4	**R**	*	14 = GS1
0014	Interchange recipient internal identification	C an..35	**O**		
0046	Interchange recipient internal sub-identification	C an..35	**N**		
S004	DATE AND TIME OF PREPARATION	M	**M**		
0017	Date	M n8	**M**		CCYYMMDD
0019	Time	M n4	**M**		HHMM
0020	Interchange control reference	M an..14	**M**		Unique reference identifying the interchange. Created

5. Segments Layout

Segment number: 2

		EDIFACT	GS1	*	Description
					by the interchange sender.
S005	RECIPIENT REFERENCE/ PASSWORD DETAILS	C	**O**		
0022	Recipient reference/password	M an..14	**M**		
0025	Recipient reference/password qualifier	C an2	**O**		
0026	Application reference	C an..14	**O**		Message identification if the interchange contains only one type of message.
0029	Processing priority code	C a1	**O**		A = Highest priority
0031	Acknowledgement request	C n1	**O**		1 = Requested
0032	Interchange agreement identifier	C an..35	**O**	*	EANCOM.....
0035	Test indicator	C n1	**O**		1 = Interchange is a test

Segment Notes:

This segment is used to envelope the interchange, as well as to identify both, the party to whom the interchange is sent and the party who has sent the interchange. The principle of the UNB segment is the same as a physical envelope which covers one or more letters or documents, and which details, both the address where delivery is to take place and the address from where the envelope has come.
S001: The character encoding specified in basic code table of ISO/IEC 646 (7-bit coded character set for information interchange) shall be used for the interchange service string advice (if used) and up to and including the composite data element S001 'Syntax identifier' in the interchange header. The character repertoire used for the characters in an interchange shall be identified from the code value of data element 0001 in S001 'Syntax identifier' in the interchange header. The character repertoire identified does not apply to objects and/or encrypted data.
The default encoding technique for a particular repertoire shall be the encoding technique defined by its associated character set specification.
DE 0001: The recommended (default) character set for use in EANCOM® for international exchanges is character set A (UNOA). Should users wish to use character sets other than A, an agreement on which set to use should be reached on a bilateral basis before communications begin.
DE 0004, 0008, 0010 and 0014: Within EANCOM® the use of the Global Location Number (GLN) is recommended for the identification of the interchange sender and recipient.
DE 0008: Identification (e.g. a division) specified by the sender of the interchange, to be included if agreed, by the recipient in response interchanges, to facilitate internal routing.
DE 0014: The address for routing, provided beforehand by the interchange recipient, is used by the interchange sender to inform the recipient of the internal address, within the latter's systems, to which the interchange should be routed. It is recommended that the GLN be used for this purpose.
DE 0007: Identification (e.g. a division) specified by the recipient of the interchange, to be included if agreed, by the sender in response interchanges, to facilitate internal routing.
DE S004: The date and time specified in this composite should be the date and time at which the interchange sender prepared the interchange. This date and time may not necessarily be the same as the date and time of contained messages.
DE 0020: The interchange control reference number is generated by the interchange sender and is used to identify uniquely each interchange. Should the interchange sender wish to re-use interchange control reference numbers, it is recommended that each number be preserved for at least a period of three months before being re-used. In order to guarantee uniqueness, the interchange control reference number should always be linked to the interchange sender's identification (DE 0004).
DE S005: The use of passwords must first be agreed bilaterally by the parties exchanging the interchange.
DE 0026: This data element is used to identify the application, on the interchange recipient's system, to which the interchange is directed. This data element may only be used if the interchange contains only one type of message, (e.g. only invoices). The reference used in this data element is assigned by the interchange sender.
DE 0031: This data element is used to indicate whether an acknowledgement to the interchange is required. The EANCOM® APERAK or CONTRL message should be used to provide acknowledgement of interchange receipt. In addition, the EANCOM® CONTRL message may be used to indicate when an interchange has been rejected

5. Segments Layout

Segment number: 2

due to syntax errors.
DE 0032: This data element is used to identify any underlying agreements which control the exchange of data. Within EANCOM® , the identity of such agreements must start with the letters 'EANCOM', the remaining characters within the data element being filled according to bilateral agreements.

UNB+UNOC:4+5412345678908:14+8798765432106:14+20020102:1000+12345555+++++EANCOMREF 52'

5. Segments Layout

Segment number: 3

UNH	- M	1 - Message header

Function:

To head, identify and specify a message.

Notes:
1. Data element S009/0057 is retained for upward compatibility. The use of S016 and/or S017 is encouraged in preference.
2. The combination of the values carried in data elements 0062 and S009 shall be used to identify uniquely the message within its group (if used) or if not used, within its interchange, for the purpose of acknowledgement.

		EDIFACT	GS1	*	Description
0062	Message reference number	M an..14	**M**		Senders unique message reference. Sequence number of messages in the interchange. DE 0062 in UNT will have the same value. Generated by the sender.
S009	MESSAGE IDENTIFIER	M	**M**		
0065	Message type	M an..6	**M**	*	OSTRPT = Order status report message
0052	Message version number	M an..3	**M**	*	D = Draft version/UN/EDIFACT Directory
0054	Message release number	M an..3	**M**	*	01B = Release 2001 - B
0051	Controlling agency, coded	M an..3	**M**	*	UN = UN/CEFACT
0057	Association assigned code	C an..6	**R**	*	EAN005 = GS1 version control number (GS1 Permanent Code) Indicates that the message is the EANCOM version 005 of the Order Status Report message.
0110	Code list directory version number	C an..6	**O**		This data element can be used to identify the codelist agreed by the interchange partners, e.g. EAN001 = EANCOM 2002 S4 codelist released on 01.12.2002 by GS1.
0113	Message type sub-function identification	C an..6	**N**		
0068	Common access reference	C an..35	**N**		
S010	STATUS OF THE TRANSFER	C	**N**		
0070	Sequence of transfers	M n..2			
0073	First and last transfer	C a1			
S016	MESSAGE SUBSET IDENTIFICATION	C	**N**		
0115	Message subset identification	M an..14			
0116	Message subset version number	C an..3			
0118	Message subset release number	C an..3			
0051	Controlling agency, coded	C an..3			
S017	MESSAGE IMPLEMENTATION GUIDELINE IDENTIFICATION	C	**N**		
0121	Message implementation guideline identification	M an..14			
0122	Message implementation guideline version number	C an..3			

5. Segments Layout

Segment number: 3

		EDIFACT	GS1	*	Description
0124	Message implementation guideline release number	C an..3			
0051	Controlling agency, coded	C an..3			
S018	SCENARIO IDENTIFICATION	C	**N**		
0127	Scenario identification	M an..14			
0128	Scenario version number	C an..3			
0130	Scenario release number	C an..3			
0051	Controlling agency, coded	C an..3			

Segment Notes:

This segment is used to head, identify and specify a message.
DE's 0065, 0052, and 0054: Indicate that the message is a UNSM Order Status Report message based on the D.01B directory.

Example:
UNH+1+OSTRPT:D:01B:UN:EAN005'

5. Segments Layout

Segment number: 4

BGM	- M	1 - Beginning of message			
Function: To indicate the type and function of a message and to transmit the identifying number.					
		EDIFACT	GS1	*	Description
C002	DOCUMENT/MESSAGE NAME	C	**R**		
1001	Document name code	C an..3	**R**	*	348 = Order status report
1131	Code list identification code	C an..17	**N**		
3055	Code list responsible agency code	C an..3	**N**		
1000	Document name	C an..35	**O**		
C106	DOCUMENT/MESSAGE IDENTIFICATION	C	**R**		
1004	Document identifier	C an..35	**R**		Order status report number assigned by document sender. For global unique identification of documents Global Document Type Identifier (GDTI) is available.
1056	Version identifier	C an..9	**N**		
1060	Revision identifier	C an..6	**N**		
1225	Message function code	C an..3	**R**	*	9 = Original
4343	Response type code	C an..3	**N**		

Segment Notes:

This segment is used to indicate the type and function of a message and to transmit the identifying number.

Example:
BGM+348+PS841+9'

5. Segments Layout

Segment number: 5

DTM - M 5 - Date/time/period					
Function: To specify date, and/or time, or period.					
		EDIFACT	GS1	*	Description
C507	DATE/TIME/PERIOD	M	**M**		
2005	Date or time or period function code qualifier	M an..3	**M**	*	137 = Document/message date/time
2380	Date or time or period value	C an..35	**R**		
2379	Date or time or period format code	C an..3	**R**		102 = CCYYMMDD 203 = CCYYMMDDHHMM
Segment Notes: This segment is used to specify the date of the order status report message. DE 2005: Identification of the 'Document/message date/time' (code value 137) is mandatory in an EANCOM message. Example: DTM+137:20021008:102'					

5. Segments Layout

Segment number: 6

RFF	- C	1 - Reference			
Function: To specify a reference.					
		EDIFACT	GS1	*	Description
C506	REFERENCE	M	**M**		
1153	Reference code qualifier	M an..3	**M**	*	ASI = Proof of delivery reference number AWZ = Handling and movement reference number AXD = Order status enquiry number AXG = Split delivery number AXA = Instruction to despatch reference number
1154	Reference identifier	C an..70	**R**		
1156	Document line identifier	C an..6	**N**		
4000	Reference version identifier	C an..35	**N**		
1060	Revision identifier	C an..6	**N**		
Segment Notes: This segment is used to identify the order status enquiry message which is being responded to. Example: RFF+AXD:12844'					

5. Segments Layout

Segment number: 7

FTX	- C	99 - Free text			
Function: To provide free form or coded text information.					
		EDIFACT	GS1	*	Description
4451	Text subject code qualifier	M an..3	**M**		AAI = General information ZZZ = Mutually defined
4453	Free text function code	C an..3	**O**	*	1 = Text for subsequent use
C107	TEXT REFERENCE	C	**D**		This composite is only used when trading partners have agreed to use mutually defined code values.
4441	Free text value code	M an..17	**M**		001 = Reference to standard text between trading partners.
1131	Code list identification code	C an..17	**O**		
3055	Code list responsible agency code	C an..3	**D**		91 = Assigned by supplier or supplier's agent 92 = Assigned by buyer or buyer's agent
C108	TEXT LITERAL	C	**D**		This data element is only used when non coded free text has been provided in data element C108.
4440	Free text value	M an..512	**M**		
4440	Free text value	C an..512	**O**		
4440	Free text value	C an..512	**O**		
4440	Free text value	C an..512	**O**		
4440	Free text value	C an..512	**O**		
3453	Language name code	C an..3	**O**		ISO 639 two alpha code
4447	Free text format code	C an..3	**N**		

Segment Notes:

This segment is used to provide free form or coded text information which applies to the complete order status report message.
Use of this segment in free form is not recommended since in most cases it inhibits automatic processing of the order status report message.
Coded references to standard texts is an available functionality which enables automatic processing and reduces transmission and processing overheads. Standard texts should be mutually defined among trading partners and can be used to cover legal and other requirements.

Example:
FTX+AAI++001::91'

5. Segments Layout

Segment number: 8

SG1	- M	99 -	NAD-LOC-SG2
NAD	- M	1 -	Name and address

Function:

To specify the name/address and their related function, either by C082 only and/or unstructured by C058 or structured by C080 thru 3207.

		EDIFACT	GS1	*	Description
3035	Party function code qualifier	M an..3	**M**		AB = Buyer's agent/representative BY = Buyer DGC = Logistic service provider DP = Delivery party SR = Supplier's agent/representative SU = Supplier
C082	PARTY IDENTIFICATION DETAILS	C	**A**		
3039	Party identifier	M an..35	**M**		For identification of parties it is recommended to use GLN - Format n13.
1131	Code list identification code	C an..17	**N**		
3055	Code list responsible agency code	C an..3	**R**	*	9 = GS1
C058	NAME AND ADDRESS	C	**O**		This composite may only be used to fulfill the requirements of directive 2003/58/EC, article 4.
3124	Name and address description	M an..35	**M**		
3124	Name and address description	C an..35	**O**		
3124	Name and address description	C an..35	**O**		
3124	Name and address description	C an..35	**O**		
3124	Name and address description	C an..35	**O**		
C080	PARTY NAME	C	**D**		
3036	Party name	M an..35	**M**		Party Name in clear text.
3036	Party name	C an..35	**O**		
3036	Party name	C an..35	**O**		
3036	Party name	C an..35	**O**		
3036	Party name	C an..35	**O**		
3045	Party name format code	C an..3	**O**		
C059	STREET	C	**D**		
3042	Street and number or post office box identifier	M an..35	**M**		Building Name/Number and Street Name
3042	Street and number or post office box identifier	C an..35	**O**		
3042	Street and number or post office box identifier	C an..35	**O**		
3042	Street and number or post office box identifier	C an..35	**O**		
3164	City name	C an..35	**D**		City/Town name, clear text
C819	COUNTRY SUB-ENTITY DETAILS	C	**D**		
3229	Country sub-entity name code	C an..9	**O**		

5. Segments Layout

Segment number: 8

		EDIFACT	GS1	*	Description
1131	Code list identification code	C an..17	**O**		
3055	Code list responsible agency code	C an..3	**O**		
3228	Country sub-entity name	C an..70	**O**		County/State, clear text.
3251	Postal identification code	C an..17	**D**		Postal Code
3207	Country name code	C an..3	**D**		ISO 3166 two alpha code

Segment Notes:

This segment is used to identify the parties involved in the order status report message. Identification of the buyer, or buyer's agent, and the supplier, or supplier's agent, is mandatory in the order status report message. A logistic service provider may act as an agent of a buyer or a supplier.

Example:
NAD+BY+5412345123453::9'
NAD+SU+5411111123451::9'

Dependency Notes:
The following composites and data elements are only used when a coded name and address can not be used.
The affected composites and data elements are as follows:
C080 - C059 - 3164 - C819 - 3251 - 3207

5. Segments Layout

Segment number: 9

SG1	- M	99	-	NAD-LOC-SG2
LOC	- C	999	-	Place/location identification

Function:

To identify a place or a location and/or related locations.

		EDIFACT	GS1	*	Description
3227	Location function code qualifier	M an..3	**M**	*	14 = Location of goods 22E = Movement to location (GS1 Temporary Code)
C517	LOCATION IDENTIFICATION	C	**N**		
3225	Location name code	C an..25			
1131	Code list identification code	C an..17			
3055	Code list responsible agency code	C an..3			
3224	Location name	C an..256			
C519	RELATED LOCATION ONE IDENTIFICATION	C	**N**		
3223	First related location name code	C an..25			
1131	Code list identification code	C an..17			
3055	Code list responsible agency code	C an..3			
3222	First related location name	C an..70			
C553	RELATED LOCATION TWO IDENTIFICATION	C	**N**		
3233	Second related location name code	C an..25			
1131	Code list identification code	C an..17			
3055	Code list responsible agency code	C an..3			
3232	Second related location name	C an..70			
5479	Relation code	C an..3	**N**		

Segment Notes:

This segment is used to identify locations related to the party specified in the NAD segment.
It is recommended that Global Location Numbers GLN - Format n13 - be used for the identification of all locations.

Example:
LOC+7+5412345678908::9'

5. Segments Layout

Segment number: 10

SG1	- M	99 -	NAD-LOC-SG2
SG2	- C	5 -	CTA-COM
CTA	- M	1 -	Contact information

Function:

To identify a person or a department to whom communication should be directed.

		EDIFACT	GS1	*	Description
3139	Contact function code	C an..3	**R**		IC = Information contact
C056	DEPARTMENT OR EMPLOYEE DETAILS	C	**O**		
3413	Department or employee name code	C an..17	**O**		
3412	Department or employee name	C an..35	**O**		

Segment Notes:

This segment is used to identify a contact department and/or person within the party specified in the NAD.
The Global Location Number GLN is particularly suitable for this purpose.

Example:
CTA+IC+:MARK CARTER'

5. Segments Layout

Segment number: 11

SG1	- M	99 -	NAD-LOC-SG2
SG2	- C	5 -	CTA-COM
COM	- C	5 -	Communication contact

Function:

To identify a communication number of a department or a person to whom communication should be directed.

		EDIFACT	GS1	*	Description
C076	COMMUNICATION CONTACT	M	**M**		
3148	Communication address identifier	M an..512	**M**		
3155	Communication address code qualifier	M an..3	**M**		AO = Uniform Resource Location (URL) EI = EDI EM = Electronic mail TE = Telephone

Segment Notes:

This segment is used to identify the communications number and the type of communications used for the department or person identified in the CTA segment.

Example:
COM+003222271020:TE'

5. Segments Layout

Segment number: 12

SG3	- M	999	-	DOC-DTM-SG4-SG6
DOC	- M	1	-	Document/message details

Function:

To identify documents and details directly related to it.

		EDIFACT	GS1	*	Description
C002	DOCUMENT/MESSAGE NAME	M	**M**		
1001	Document name code	C an..3	**R**		220 = Order 221 = Blanket order 226 = Call off order 351 = Despatch advice 297 = Instruction to collect 240 = Delivery instructions 350 = Despatch order 738 = Cargo/goods handling and movement message
1131	Code list identification code	C an..17	**O**		
3055	Code list responsible agency code	C an..3	**D**		
1000	Document name	C an..35	**O**		
C503	DOCUMENT/MESSAGE DETAILS	C	**R**		
1004	Document identifier	C an..35	**R**		
1373	Document status code	C an..3	**N**		
1366	Document source description	C an..70	**N**		
3453	Language name code	C an..3	**N**		
1056	Version identifier	C an..9	**N**		
1060	Revision identifier	C an..6	**N**		
3153	Communication medium type code	C an..3	**N**		
1220	Document copies required quantity	C n..2	**N**		
1218	Document originals required quantity	C n..2	**N**		

Segment Notes:

This segment is used to identify the document(s) for which status information is being provided.

Example:
DOC+220+OR877-22'

5. Segments Layout

Segment number: 13

SG3	- M	999	-	DOC-DTM-SG4-SG6
DTM	- C	5	-	Date/time/period

Function:

To specify date, and/or time, or period.

		EDIFACT	GS1	*	Description
C507	DATE/TIME/PERIOD	M	**M**		
2005	Date or time or period function code qualifier	M an..3	**M**	*	9 = Processing date/time 11 = Despatch date and/or time 67 = Delivery date/time, current schedule 137 = Document/message date/time 154 = Acceptance date of document 178 = Arrival date/time, actual Code 9 is used to indicate the date on which an order, for which status information is being provided, has been processed. Code 154 is used to indicate the date on which the order was officially accepted by the supplier of the product or service.
2380	Date or time or period value	C an..35	**R**		
2379	Date or time or period format code	C an..3	**R**		102 = CCYYMMDD 203 = CCYYMMDDHHMM

Segment Notes:

This segment is used to specify dates relating to the references given in the previous DOC segment.

Example:
DTM+9:20020304:102'
The currently referenced order was processed on the 4th of March 2002.

5. Segments Layout

Segment number: 14

SG3	- M	999	-	DOC-DTM-SG4-SG6
SG4	- C	99	-	STS-DTM-PCD-SG5
STS	- M	1	-	Status

Function:

To specify the status of an object or service, including its category and the reason(s) for the status.

		EDIFACT	GS1	*	Description
C601	STATUS CATEGORY	C	**O**		
9015	Status category code	M an..3	**M**		UP2 = Order (GS1 Temporary Code) UP3 = Cash on delivery order (GS1 Temporary Code) UP4 = Urgent order (GS1 Temporary Code) UP5 = Previous call off order (GS1 Temporary Code)
1131	Code list identification code	C an..17	**N**		
3055	Code list responsible agency code	C an..3	**D**	*	9 = GS1
C555	STATUS	C	**O**		
4405	Status description code	M an..3	**M**		14 = Process, completed 21 = Delivery, completed 27 = Despatch, completed 64 = Order or request cancelled 314 = Delayed, at origin 315 = Held, by logistic service provider 316 = Incident occurred but accepted by ordering party 22E = Despatched urgent (GS1 Temporary Code) 23E = Delivered cash on delivery (GS1 Temporary Code) 24E = Delivered previous call (GS1 Temporary Code) 26E = Not enough information for despatch (GS1 Temporary Code) 31E = Despatch being prepared (GS1 Temporary Code) 39E = Goods returned by recipient (GS1 Temporary Code) 76E = Not collected (GS1 Temporary Code)
1131	Code list identification code	C an..17	**N**		
3055	Code list responsible agency code	C an..3	**D**	*	9 = GS1
4404	Status description	C an..35	**N**		
C556	STATUS REASON	C	**O**		
9013	Status reason description code	M an..3	**M**		13 = Customs refusal 22 = Empty 16 = Destination incorrect 25 = Export restrictions 28 = Import restrictions 46 = Payment not received 68 = Undefined incident attributed to buyer 69 = Undefined incident attributed to carrier 23E = Delivery different date (GS1 Temporary

5. Segments Layout

Segment number: 14

		EDIFACT	GS1	*	Description
					Code) 28E = Delivery too late (GS1 Temporary Code) 35E = Incident attributed to seller (GS1 Temporary Code) This data element is only used when a negative event, e.g. not collected, is used in data element 4405. The data element is used to provide a reason for the event detailed in data element 4405.
1131	Code list identification code	C an..17	**N**		
3055	Code list responsible agency code	C an..3	**D**	*	9 = GS1
9012	Status reason description	C an..256	**D**		
C556	STATUS REASON	C	**O**		
9013	Status reason description code	M an..3	**M**		
1131	Code list identification code	C an..17	**N**		
3055	Code list responsible agency code	C an..3	**D**	*	9 = GS1
9012	Status reason description	C an..256	**D**		
C556	STATUS REASON	C	**O**		
9013	Status reason description code	M an..3	**M**		
1131	Code list identification code	C an..17	**N**		
3055	Code list responsible agency code	C an..3	**D**	*	9 = GS1
9012	Status reason description	C an..256	**D**		
C556	STATUS REASON	C	**O**		
9013	Status reason description code	M an..3	**M**		
1131	Code list identification code	C an..17	**N**		
3055	Code list responsible agency code	C an..3	**D**	*	9 = GS1
9012	Status reason description	C an..256	**D**		
C556	STATUS REASON	C	**O**		
9013	Status reason description code	M an..3	**M**		
1131	Code list identification code	C an..17	**N**		
3055	Code list responsible agency code	C an..3	**D**	*	
9012	Status reason description	C an..256	**D**		

Segment Notes:

This segment is used to provide status information related to the currently referenced document.

Example:
STS+UP2::9+25E::9+29E'
The purchase order was cancelled because partial delivery is not allowed.

5. Segments Layout

Segment number: 14

STS+UP2::9+27'
The purchase order has been despatched.

Dependency Notes:
DE 3055: This data element is only used when GS1 code values are being used in data element 9015, 4405 or 9013.
DE 9012: This data element is not generally recommended because all text provided here will have to be manually processed.

5. Segments Layout

Segment number: 15

SG3	- M	999 -	DOC-DTM-SG4-SG6
SG4	- C	99 -	STS-DTM-PCD-SG5
DTM	- C	5 -	Date/time/period

Function:

To specify date, and/or time, or period.

		EDIFACT	GS1	*	Description
C507	DATE/TIME/PERIOD	M	**M**		
2005	Date or time or period function code qualifier	M an..3	**M**	*	35 = Delivery date/time, actual 76 = Delivery date/time, scheduled for 334 = Status change date/time 800 = Next status report date Code value 800 is used to indicate the next date/time on which a status report will be provided. Code value 334 is used to indicate the date/time when a status changes.
2380	Date or time or period value	C an..35	**R**		
2379	Date or time or period format code	C an..3	**R**		102 = CCYYMMDD 203 = CCYYMMDDHHMM

Segment Notes:

This segment is used to specify dates relating to the current status.

Example:
DTM+334:20020315:102'

5. Segments Layout

Segment number: 16

SG3	- M	999	-	DOC-DTM-SG4-SG6
SG4	- C	99	-	STS-DTM-PCD-SG5
PCD	- C	1	-	Percentage details

Function:

To specify percentage information.

		EDIFACT	GS1	*	Description
C501	PERCENTAGE DETAILS	M	**M**		
5245	Percentage type code qualifier	M an..3	**M**		1 = Allowance 161 = Transport weight completed 162 = Transport volume completed 163 = Percentage of order Codes 161 and 162 in data element 5245 are to be used only when weights or cubes in transport or movement orders are being reported.
5482	Percentage	C n..10	**R**		
5249	Percentage basis identification code	C an..3	**O**		
1131	Code list identification code	C an..17	**N**		
3055	Code list responsible agency code	C an..3	**D**	*	9 = GS1
4405	Status description code	C an..3	**N**		

Segment Notes:

This segment is used to specify percentage complete figures related to the current order being reported upon. Whether this PCD relates to the total number of lines or the total amount of quantity of the referenced document must be agreed bilaterally.

Example:
PCD+163:40'
The order is 40% completed.

5. Segments Layout

Segment number: 17

SG3	- M	999	-	DOC-DTM-SG4-SG6
SG4	- C	99	-	STS-DTM-PCD-SG5
SG5	- C	99	-	NAD
NAD	- M	1	-	Name and address

Function:

To specify the name/address and their related function, either by C082 only and/or unstructured by C058 or structured by C080 thru 3207.

		EDIFACT	GS1	*	Description
3035	Party function code qualifier	M an..3	**M**		AB = Buyer's agent/representative BY = Buyer CA = Carrier CM = Customs CN = Consignee CZ = Consignor DGC = Logistic service provider DP = Delivery party SR = Supplier's agent/representative SU = Supplier WH = Warehouse keeper
C082	PARTY IDENTIFICATION DETAILS	C	**A**		
3039	Party identifier	M an..35	**M**		GLN - Format n13 For identification of parties it is recommended to use GLN.
1131	Code list identification code	C an..17	**N**		
3055	Code list responsible agency code	C an..3	**R**	*	9 = GS1
C058	NAME AND ADDRESS	C	**O**		This composite may only be used to fulfill the requirements of directive 2003/58/EC, article 4.
3124	Name and address description	M an..35	**M**		
3124	Name and address description	C an..35	**O**		
3124	Name and address description	C an..35	**O**		
3124	Name and address description	C an..35	**O**		
3124	Name and address description	C an..35	**O**		
C080	PARTY NAME	C	**D**		
3036	Party name	M an..35	**M**		Party Name in clear text.
3036	Party name	C an..35	**O**		
3036	Party name	C an..35	**O**		
3036	Party name	C an..35	**O**		
3036	Party name	C an..35	**O**		
3045	Party name format code	C an..3	**O**		
C059	STREET	C	**D**		
3042	Street and number or post office box identifier	M an..35	**M**		Building Name/Number and Street Name
3042	Street and number or post office box identifier	C an..35	**O**		
3042	Street and number or post	C an..35	**O**		

5. Segments Layout

Segment number: 17

		EDIFACT	GS1	*	Description
	office box identifier				
3042	Street and number or post office box identifier	C an..35	**O**		
3164	City name	C an..35	**D**		City/Town name, clear text
C819	COUNTRY SUB-ENTITY DETAILS	C	**D**		
3229	Country sub-entity name code	C an..9	**O**		
1131	Code list identification code	C an..17	**O**		
3055	Code list responsible agency code	C an..3	**O**		
3228	Country sub-entity name	C an..70	**O**		County/State, clear text.
3251	Postal identification code	C an..17	**D**		Postal code
3207	Country name code	C an..3	**D**		ISO 3166 two alpha code

Segment Notes:

This segment is used to identify any parties related to the current status being reported.

Example:
NAD+CA+5422331123459::9'

Dependency Notes:
The following composites and data elements are only used when a coded name and address can not be used.
The affected composites and data elements are as follows:
C080 - C059 - 3164 - C819 - 3251 - 3207

5. Segments Layout

Segment number: 18

SG3	- M	999	-	DOC-DTM-SG4-SG6
SG6	- C	999999	-	LIN-PIA-IMD-SG7-SG8-SG16
LIN	- M	1	-	Line item

Function:

To identify a line item and configuration.

		EDIFACT	GS1	*	Description
1082	Line item identifier	C an..6	**O**		Application generated number of the item lines within the order status report message.
1229	Action request/notification description code	C an..3	**N**		
C212	ITEM NUMBER IDENTIFICATION	C	**D**		This composite is only used for the identification of GS1 codes. If another coding structure is required, e. g. Harmonised system number, this composite will not be used and the code will be detailed in the PIA segment.
7140	Item identifier	C an..35	**R**		Format n..14. GTIN.
7143	Item type identification code	C an..3	**R**	*	SRV = GS1 Global Trade Item Number
1131	Code list identification code	C an..17	**N**		
3055	Code list responsible agency code	C an..3	**N**		
C829	SUB-LINE INFORMATION	C	**D**		
5495	Sub-line indicator code	C an..3	**R**	*	1 = Sub-line information
1082	Line item identifier	C an..6	**R**		
1222	Configuration level number	C n..2	**N**		
7083	Configuration operation code	C an..3	**N**		

Segment Notes:

This segment is used to identify a product on an order for which status information is being provided.
If Global Trade Item Numbers are available it is mandatory to use GTIN within the LIN segment.

Note on DE 1082:
Numbering rule: In Part I, section 4.10 there is the recommendation “Within EANCOM® it is recommended that the line numbers used in the first occurrence of data element 1082 in the LIN segment be sequential, starting at 1 for each new message.”

Note on DE 7140:
Only the following significant digits are possible:
- 8 digits for GTIN 8 codes
- 12 digits for GTIN 12 codes
- 13 digits for GTIN 13 codes
- 14 digits for GTIN 14 codes

Dependency Note:
C829 is only used when sub-lines are required.
FOR A COMPLETE DESCRIPTION ON THE USAGE OF SUB-LINES PLEASE REFER TO PART I, SECTION 4.10.

Example:
LIN+1++4000862141404:SRV'

5. Segments Layout

Segment number: 19

SG3	- M	999	-	DOC-DTM-SG4-SG6
SG6	- C	999999	-	LIN-PIA-IMD-SG7-SG8-SG16
PIA	- C	99	-	Additional product id

Function:

To specify additional or substitutional item identification codes.

		EDIFACT	GS1	*	Description
4347	Product identifier code qualifier	M an..3	**M**	*	1 = Additional identification 3 = Substituted by 4 = Substituted for 5 = Product identification Product Id function coded has the following restricted coded functions: 1 - Additional Identification - To provide an additional identity for the product identified in the LIN segment. The additional identification can consist of : A supplemental identification which provides more information complementary to the main GTIN provided in the LIN segment, e.g. a harmonised system number, promotional variant number, product group number, etc. An alternative identification which may be used instead of the main GTIN provided in the LIN segment, e.g. a buyers article number, etc. 3 - This code value can only be used with code 297, 240 or 250 in DE 1001 in the DOC segment. 4 - This code value can only be used with code 297, 240 or 250 in DE 1001 in the DOC segment. 5 - Product Identification - To provide the primary product identification code when no GTIN has been provided in the LIN segment.
C212	ITEM NUMBER IDENTIFICATION	M	**M**		
7140	Item identifier	C an..35	**R**		
7143	Item type identification code	C an..3	**R**		HS = Harmonised system MF = Manufacturer's (producer's) article number PV = Promotional variant number SA = Supplier's article number SRV = GS1 Global Trade Item Number
1131	Code list identification code	C an..17	**O**		
3055	Code list responsible agency code	C an..3	**D**		9 = GS1
C212	ITEM NUMBER IDENTIFICATION	C	**O**		
7140	Item identifier	C an..35	**R**		
7143	Item type identification code	C an..3	**R**		
1131	Code list identification code	C an..17	**O**		
3055	Code list responsible agency code	C an..3	**D**		
C212	ITEM NUMBER IDENTIFICATION	C	**O**		

5. Segments Layout

Segment number: 19

		EDIFACT	GS1	*	Description
7140	Item identifier	C an..35	**R**		
7143	Item type identification code	C an..3	**R**		
1131	Code list identification code	C an..17	**O**		
3055	Code list responsible agency code	C an..3	**D**		
C212	ITEM NUMBER IDENTIFICATION	C	**O**		
7140	Item identifier	C an..35	**R**		
7143	Item type identification code	C an..3	**R**		
1131	Code list identification code	C an..17	**O**		
3055	Code list responsible agency code	C an..3	**D**		
C212	ITEM NUMBER IDENTIFICATION	C	**O**		
7140	Item identifier	C an..35	**R**		
7143	Item type identification code	C an..3	**R**		
1131	Code list identification code	C an..17	**O**		
3055	Code list responsible agency code	C an..3	**D**		

Segment Notes:

This segment is used to specify additional or substitutional item identification codes such as a buyer's or supplier's item number.

Example:
PIA+1+ABC5343:MF'
In this example the PIA segment is used to provide an additional identification to the GTIN provided in the LIN segment. The GTIN 4000862141404 provided in the LIN segment refers to the manufacturers article number ABC5343.

PIA+5+2209953C001L:AC'
This example details the HIBC code 2209953C001L which is provided as the primary product code because no GTIN was provided in the LIN segment.

5. Segments Layout

Segment number: 20

SG3	- M	999	- DOC-DTM-SG4-SG6
SG6	- C	999999	- LIN-PIA-IMD-SG7-SG8-SG16
IMD	- C	99	- Item description

Function:

To describe an item in either an industry or free format.

		EDIFACT	GS1	*	Description
7077	Description format code	C an..3	**O**		B = Code and text C = Code (from industry code list) F = Free-form S = Structured (from industry code list)
C272	ITEM CHARACTERISTIC	C	**O**		
7081	Item characteristic code	C an..3	**R**		
1131	Code list identification code	C an..17	**O**		
3055	Code list responsible agency code	C an..3	**D**	*	9 = GS1 Must be used if DE7081 contains an GS1 code.
C273	ITEM DESCRIPTION	C	**A**		
7009	Item description code	C an..17	**O**		CU = Consumer unit (GS1 Permanent Code) DU = Despatch unit (GS1 Permanent Code) TU = Traded unit (GS1 Permanent Code)
1131	Code list identification code	C an..17	**O**		
3055	Code list responsible agency code	C an..3	**D**		9 = GS1 91 = Assigned by supplier or supplier's agent 92 = Assigned by buyer or buyer's agent
7008	Item description	C an..256	**O**		
7008	Item description	C an..256	**O**		
3453	Language name code	C an..3	**O**		
7383	Surface or layer code	C an..3	**N**		

Segment Notes:

This segment is used to describe the current line item.
It is recommended that this segment only be used for coded descriptions. Data element 7008 in clear text should only be used when no product code is available or when free-form descriptions are required by trading partners.

Example:
IMD+C++TU::9'
IMD+F++:::CORN CRUNCHIES:CASE'

5. Segments Layout

Segment number: 21

SG3	- M	999	-	DOC-DTM-SG4-SG6
SG6	- C	999999	-	LIN-PIA-IMD-SG7-SG8-SG16
SG7	- C	999	-	RFF-DTM
RFF	- M	1	-	Reference

Function:

To specify a reference.

		EDIFACT	GS1	*	Description
C506	REFERENCE	M	**M**		
1153	Reference code qualifier	M an..3	**M**		AWZ = Handling and movement reference number LI = Line item reference number ON = Order number (buyer) VN = Order number (supplier)
1154	Reference identifier	C an..70	**R**		
1156	Document line identifier	C an..6	**O**		
4000	Reference version identifier	C an..35	**N**		
1060	Revision identifier	C an..6	**N**		

Segment Notes:

This segment is used to provide any references related to the current line item.

Example:
RFF+ON:XC5160:15'
This example identifies line number 15 on order number XC5160.

5. Segments Layout

Segment number: 22

SG3	- M	999	-	DOC-DTM-SG4-SG6
SG6	- C	999999	-	LIN-PIA-IMD-SG7-SG8-SG16
SG7	- C	999	-	RFF-DTM
DTM	- C	1	-	Date/time/period

Function:

To specify date, and/or time, or period.

		EDIFACT	GS1	*	Description
C507	DATE/TIME/PERIOD	M	**M**		
2005	Date or time or period function code qualifier	M an..3	**M**	*	171 = Reference date/time
2380	Date or time or period value	C an..35	**R**		
2379	Date or time or period format code	C an..3	**R**		102 = CCYYMMDD 203 = CCYYMMDDHHMM

Segment Notes:

This segment is used to specify dates relating to the references given in the previous RFF segment.

Example:
DTM+171:20020804:102'

5. Segments Layout

Segment number: 23

SG3	- M	999 -	DOC-DTM-SG4-SG6
SG6	- C	999999 -	LIN-PIA-IMD-SG7-SG8-SG16
SG8	- C	99 -	STS-DTM-PCD-QTY-SG9
STS	- M	1 -	Status

Function:

To specify the status of an object or service, including its category and the reason(s) for the status.

		EDIFACT	GS1	*	Description
C601	STATUS CATEGORY	C	**O**		
9015	Status category code	M an..3	**M**		UP2 = Order (GS1 Temporary Code) UP3 = Cash on delivery order (GS1 Temporary Code) UP4 = Urgent order (GS1 Temporary Code) UP5 = Previous call off order (GS1 Temporary Code)
1131	Code list identification code	C an..17	**N**		
3055	Code list responsible agency code	C an..3	**D**	*	9 = GS1
C555	STATUS	C	**O**		
4405	Status description code	M an..3	**M**		21 = Delivery, completed 27 = Despatch, completed 64 = Order or request cancelled 314 = Delayed, at origin 315 = Held, by logistic service provider 316 = Incident occurred but accepted by ordering party 34E = Collected by the consignee (GS1 Temporary Code) 39E = Goods returned by recipient (GS1 Temporary Code)
1131	Code list identification code	C an..17	**N**		
3055	Code list responsible agency code	C an..3	**D**	*	9 = GS1
4404	Status description	C an..35	**N**		
C556	STATUS REASON	C	**O**		
9013	Status reason description code	M an..3	**M**		13 = Customs refusal 22 = Empty 16 = Destination incorrect 25 = Export restrictions 68 = Undefined incident attributed to buyer 69 = Undefined incident attributed to carrier 23E = Delivery different date (GS1 Temporary Code) 25E = Goods previously delivered (GS1 Temporary Code) 26E = Goods damaged in warehouse (GS1 Temporary Code) 28E = Delivery too late (GS1 Temporary Code) 29E = Partial delivery not accepted (GS1 Temporary Code) 31E = Product out of stock (GS1 Temporary Code)

5. Segments Layout

Segment number: 23

		EDIFACT	GS1	*	Description
					35E = Incident attributed to seller (GS1 Temporary Code) This data element is only used when a negative event, e.g. not collected, is used in data element 4405. The data element is used to provide a reason for the event detailed in data element 4405.
1131	Code list identification code	C an..17	**N**		
3055	Code list responsible agency code	C an..3	**D**	*	9 = GS1
9012	Status reason description	C an..256	**D**		
C556	STATUS REASON	C	**O**		
9013	Status reason description code	M an..3	**M**		
1131	Code list identification code	C an..17	**N**		
3055	Code list responsible agency code	C an..3	**D**	*	9 = GS1
9012	Status reason description	C an..256	**N**		
C556	STATUS REASON	C	**O**		
9013	Status reason description code	M an..3	**M**		
1131	Code list identification code	C an..17	**N**		
3055	Code list responsible agency code	C an..3	**D**	*	9 = GS1
9012	Status reason description	C an..256	**N**		
C556	STATUS REASON	C	**O**		
9013	Status reason description code	M an..3	**M**		
1131	Code list identification code	C an..17	**N**		
3055	Code list responsible agency code	C an..3	**D**	*	9 = GS1
9012	Status reason description	C an..256	**N**		
C556	STATUS REASON	C	**O**		
9013	Status reason description code	M an..3	**M**		
1131	Code list identification code	C an..17	**N**		
3055	Code list responsible agency code	C an..3	**D**	*	9 = GS1
9012	Status reason description	C an..256	**N**		

Segment Notes:

This segment is used to provide status information related to the current line item.

Example:
STS+UP2::9+64+29E::9'
The order line was cancelled because partial delivery is not allowed.

STS+UP2::9+27'
The order line has been despatched.

5. Segments Layout

Segment number: 23

Dependency Notes:
DE 9012: This data element is not generally recommended because all text provided here will have to be manually processed.
DE 3055: This data element is only used when GS1 code values are being used in data element 9015, 4405 or 9013.

5. Segments Layout

Segment number: 24

SG3	- M	999	-	DOC-DTM-SG4-SG6
SG6	- C	999999	-	LIN-PIA-IMD-SG7-SG8-SG16
SG8	- C	99	-	STS-DTM-PCD-QTY-SG9
DTM	- C	5	-	Date/time/period

Function:

To specify date, and/or time, or period.

		EDIFACT	GS1	*	Description
C507	DATE/TIME/PERIOD	M	**M**		
2005	Date or time or period function code qualifier	M an..3	**M**	*	334 = Status change date/time 800 = Next status report date Code value 800 is used to indicate the next date/time on which a status report will be provided. Code value 334 is used to indicate the date/time when a status changes.
2380	Date or time or period value	C an..35	**R**		
2379	Date or time or period format code	C an..3	**R**		102 = CCYYMMDD 203 = CCYYMMDDHHMM

Segment Notes:

This segment is used to specify dates relating to the current status.

Example:
DTM+334:20020804:102'

5. Segments Layout

Segment number: 25

SG3	- M	999	-	DOC-DTM-SG4-SG6
SG6	- C	999999	-	LIN-PIA-IMD-SG7-SG8-SG16
SG8	- C	99	-	STS-DTM-PCD-QTY-SG9
PCD	- C	1	-	Percentage details

Function:

To specify percentage information.

		EDIFACT	GS1	*	Description
C501	PERCENTAGE DETAILS	M	**M**		
5245	Percentage type code qualifier	M an..3	**M**		161 = Transport weight completed 162 = Transport volume completed 163 = Percentage of order Codes 161 and 162 in data element 5245 are to be used only when weights or cubes in transport or movement orders are being reported.
5482	Percentage	C n..10	**R**		
5249	Percentage basis identification code	C an..3	**O**		
1131	Code list identification code	C an..17	**N**		
3055	Code list responsible agency code	C an..3	**D**	*	9 = GS1
4405	Status description code	C an..3	**N**		

Segment Notes:

This segment is used to specify percentage complete figures related to the status of the current line item.

Example:
PCD+163:12'
The current line item is 12% completed.

5. Segments Layout

Segment number: 26

SG3	- M	999	-	DOC-DTM-SG4-SG6
SG6	- C	999999	-	LIN-PIA-IMD-SG7-SG8-SG16
SG8	- C	99	-	STS-DTM-PCD-QTY-SG9
QTY	- C	1	-	Quantity

Function:

To specify a pertinent quantity.

		EDIFACT	GS1	*	Description
C186	QUANTITY DETAILS	M	**M**		
6063	Quantity type code qualifier	M an..3	**M**		11 = Split quantity 21 = Ordered quantity 46 = Delivered quantity 83 = Backorder quantity
6060	Quantity	M an..35	**M**		
6411	Measurement unit code	C an..3	**D**		This DE is only used if the current line item is of variable quantity.

Segment Notes:

This segment is used to specify quantities related to the current status.
If one item identified in LIN/PIA exists in more than one status (e.g., multiple batches or lots) the sum of all quantities of SG8-QTY expresses the total quantity.

Example:
QTY+21:12'

5. Segments Layout

Segment number: 27

SG3	- M	999 -	DOC-DTM-SG4-SG6
SG6	- C	999999 -	LIN-PIA-IMD-SG7-SG8-SG16
SG8	- C	99 -	STS-DTM-PCD-QTY-SG9
SG9	- C	99 -	NAD
NAD	- M	1 -	Name and address

Function:

To specify the name/address and their related function, either by C082 only and/or unstructured by C058 or structured by C080 thru 3207.

		EDIFACT	GS1	*	Description
3035	Party function code qualifier	M an..3	**M**		AB = Buyer's agent/representative BY = Buyer CA = Carrier CM = Customs CN = Consignee CZ = Consignor DGC = Logistic service provider DP = Delivery party SR = Supplier's agent/representative SU = Supplier WH = Warehouse keeper
C082	PARTY IDENTIFICATION DETAILS	C	**A**		
3039	Party identifier	M an..35	**M**		For identification of parties it is recommended to use GLN - Format n13.
1131	Code list identification code	C an..17	**N**		
3055	Code list responsible agency code	C an..3	**R**	*	9 = GS1
C058	NAME AND ADDRESS	C	**O**		This composite may only be used to fulfill the requirements of directive 2003/58/EC, article 4.
3124	Name and address description	M an..35	**M**		
3124	Name and address description	C an..35	**O**		
3124	Name and address description	C an..35	**O**		
3124	Name and address description	C an..35	**O**		
3124	Name and address description	C an..35	**O**		
C080	PARTY NAME	C	**D**		
3036	Party name	M an..35	**M**		Party Name in clear text.
3036	Party name	C an..35	**O**		
3036	Party name	C an..35	**O**		
3036	Party name	C an..35	**O**		
3036	Party name	C an..35	**O**		
3045	Party name format code	C an..3	**O**		
C059	STREET	C	**D**		
3042	Street and number or post office box identifier	M an..35	**M**		Building Name/Number and Street Name
3042	Street and number or post office box identifier	C an..35	**O**		

5. Segments Layout

Segment number: 27

		EDIFACT	GS1	*	Description
3042	Street and number or post office box identifier	C an..35	**O**		
3042	Street and number or post office box identifier	C an..35	**O**		
3164	City name	C an..35	**D**		City/town, clear text
C819	COUNTRY SUB-ENTITY DETAILS	C	**D**		
3229	Country sub-entity name code	C an..9	**O**		
1131	Code list identification code	C an..17	**O**		
3055	Code list responsible agency code	C an..3	**O**		
3228	Country sub-entity name	C an..70	**O**		County/State, clear text.
3251	Postal identification code	C an..17	**D**		Postal code
3207	Country name code	C an..3	**D**		ISO 3166 two alpha code

Segment Notes:

This segment is used to identify any parties related to the status being provided.

Example:
NAD+CM+5432154111113::9'

Dependency Notes:
The following composites and data elements are only used when a coded name and address can not be used.
The affected composites and data elements are as follows:
C080 - C059 - 3164 - C819 - 3251 - 3207

5. Segments Layout

Segment number: 28

SG3	- M	999 -	DOC-DTM-SG4-SG6
SG6	- C	999999 -	LIN-PIA-IMD-SG7-SG8-SG16
SG16	- C	99 -	SCC-SG17
SCC	- M	1 -	Scheduling conditions

Function:

To specify scheduling conditions.

		EDIFACT	GS1	*	Description
4017	Delivery plan commitment level code	M an..3	**M**		1 = Firm 4 = Planning/forecast
4493	Delivery instruction code	C an..3	**O**		DA = Do not deliver after DB = Do not deliver before
C329	PATTERN DESCRIPTION	C	**O**		
2013	Frequency code	C an..3	**O**		M = Monthly (calendar months) Q = Quarterly (calendar quarters) S = Semi-annually (calendar year) W = Weekly Y = Daily
2015	Despatch pattern code	C an..3	**O**		10 = Monday through Friday 11 = Monday through Saturday 12 = Monday through Sunday 13 = Monday 14 = Tuesday 15 = Wednesday 16 = Thursday 17 = Friday
2017	Despatch pattern timing code	C an..3	**O**		D = A.M. E = P.M. H = 24 hour clock

Segment Notes:

This segment is used to indicate any delivery schedules for the current line item. As the SCC segment (SG16) is the trigger of the following segment group, its use is mandatory, if one of the following segments (SG17) shall be used.

Example:
SCC+1++W:14:D'
Firm schedule, every Tuesday morning.

5. Segments Layout

Segment number: 29

SG3	- M	999 -	DOC-DTM-SG4-SG6
SG6	- C	999999 -	LIN-PIA-IMD-SG7-SG8-SG16
SG16	- C	99 -	SCC-SG17
SG17	- C	99 -	LOC-DTM-QTY
LOC	- M	1 -	Place/location identification

Function:

To identify a place or a location and/or related locations.

		EDIFACT	GS1	*	Description
3227	Location function code qualifier	M an..3	**M**		7 = Place of delivery 9 = Place/port of loading
C517	LOCATION IDENTIFICATION	C	**A**		
3225	Location name code	C an..25	**A**		GLN - Format n13
1131	Code list identification code	C an..17	**O**		
3055	Code list responsible agency code	C an..3	**D**		9 = GS1 DE 3055 must be used if DE 3225 is used and does not contain an UN/LOCODE.
3224	Location name	C an..256	**O**		
C519	RELATED LOCATION ONE IDENTIFICATION	C	**N**		
3223	First related location name code	C an..25			
1131	Code list identification code	C an..17			
3055	Code list responsible agency code	C an..3			
3222	First related location name	C an..70			
C553	RELATED LOCATION TWO IDENTIFICATION	C	**N**		
3233	Second related location name code	C an..25			
1131	Code list identification code	C an..17			
3055	Code list responsible agency code	C an..3			
3232	Second related location name	C an..70			
5479	Relation code	C an..3	**N**		

Segment Notes:

This segment is used to identify locations related to the quantity specified in the QTY segment. As the LOC segment is the trigger of this segment group, its use is mandatory, if one of the following segments shall be used.

Example:
LOC+7+5412345111115::9'

5. Segments Layout

Segment number: 30

SG3	- M	999	-	DOC-DTM-SG4-SG6
SG6	- C	999999	-	LIN-PIA-IMD-SG7-SG8-SG16
SG16	- C	99	-	SCC-SG17
SG17	- C	99	-	LOC-DTM-QTY
DTM	- C	5	-	Date/time/period

Function:

To specify date, and/or time, or period.

		EDIFACT	GS1	*	Description
C507	DATE/TIME/PERIOD	M	**M**		
2005	Date or time or period function code qualifier	M an..3	**M**		2 = Delivery date/time, requested 61 = Cancel if not delivered by this date
2380	Date or time or period value	C an..35	**R**		
2379	Date or time or period format code	C an..3	**R**		102 = CCYYMMDD 718 = CCYYMMDD-CCYYMMDD

Segment Notes:

This segment is used to specify any dates and or times related to the segment group.

Example:
DTM+2:20021215:102'

5. Segments Layout

Segment number: 31

SG3	- M	999	-	DOC-DTM-SG4-SG6
SG6	- C	999999	-	LIN-PIA-IMD-SG7-SG8-SG16
SG16	- C	99	-	SCC-SG17
SG17	- C	99	-	LOC-DTM-QTY
QTY	- C	1	-	Quantity

Function:

To specify a pertinent quantity.

		EDIFACT	GS1	*	Description
C186	QUANTITY DETAILS	M	**M**		
6063	Quantity type code qualifier	M an..3	**M**		11 = Split quantity 21 = Ordered quantity 46 = Delivered quantity 83 = Backorder quantity
6060	Quantity	M an..35	**M**		
6411	Measurement unit code	C an..3	**D**		This DE is only used if the current line item is of variable quantity.

Segment Notes:

This segment is used to specify quantities related to the current location.
If one status (SG8-STS) has more than one SCC/LOC the sum of all SG17 quantities equals the quantity at the related SG8-QTY.

Example:
QTY+21:12'

5. Segments Layout

Segment number: 32

UNT - M 1 - Message trailer					
Function: To end and check the completeness of a message. Notes: 1. 0062, the value shall be identical to the value in 0062 in the corresponding UNH segment.					
		EDIFACT	GS1	*	Description
0074	Number of segments in a message	M n..10	**M**		The total number of segments in the message is detailed here.
0062	Message reference number	M an..14	**M**		The message reference numbered detailed here should equal the one specified in the UNH segment.
Segment Notes: This segment is a mandatory UN/EDIFACT segment. It must always be the last segment in the message. Example: UNT+31+1'					

5. Segments Layout

Segment number: 33

UNZ	- M	1 - Interchange trailer

Function:

To end and check the completeness of an interchange.

Notes:
1. 0020, the value shall be identical to the value in 0020 in the corresponding UNB segment.

		EDIFACT	GS1	*	Description
0036	Interchange control count	M n..6	**M**		Number of messages or functional groups within an interchange.
0020	Interchange control reference	M an..14	**M**		Identical to DE 0020 in UNB segment.

Segment Notes:

This segment is used to provide the trailer of an interchange.
DE 0036: If functional groups are used, this is the number of functional groups within the interchange. If functional groups are not used, this is the number of messages within the interchange.
UNZ+5+12345555'

6. Examples

Example 1

The following is an example of a Order Status Report message sent from a supplier identified by GLN 5411111123451 to a buyer identified by GLN 5412345123453. The order status report was generated on the 6th of January 2002 and has the identity number OR5252.

The message provides status information for four purchase orders which are currently outstanding.

Order number CD2544 dated the 31st of December 2001 was despatched urgent using the carrier identified by GLN 5422331123459 on the 2nd of January 2002.

Order number BH4155 dated the 24th of December 2001 was delivered to the delivery party identified by GLN 5412345111115 on the 28th of December 2001.

Order number AJ5223 dated the 2nd of December 2001 has been refused clearance by the customs.

Order number CO5473 dated the 27th of December 2001 has been cancelled by the customer.

UNH+1+OSTRPT:D:01B:UN:EAN005'	Message header
BGM+348+OR5252+9'	Order status report number OR5252
DTM+137:20020106:102'	Message date 6th of January 2002
NAD+BY+5412345123453::9'	Buyer is identified by GLN 5412345123453
NAD+SU+5411111123451::9'	Supplier is identified by GLN 5411111123451
DOC+220+CD2544'	First order number CD2544
DTM+137:20011231:102'	Order date 31st of December 2001
STS+6::9+22E::9'	Status of order is despatched urgent
DTM+334:20020102:102'	Status date 2nd of January 2002
NAD+CA+5422331123459::9'	Carrier with whom urgent despatch was sent, identified by GLN 5422331123459
DOC+220+BH4155'	Second order number BH4155
DTM+137:20011224:102'	Order date 24th of December 2001
STS+7::9+21::9'	Order has been delivered
DTM+334:20011228:102'	Status date 28th of December 2001
NAD+DP+5412345111115::9'	Delivery party to whom goods were destined is identified by GLN 5412345111115
DOC+220+AJ5223'	Third order number AJ5223
DTM+137:20011202:102'	Order date 2nd of December 2001
STS+7::9+17'	Order has been refused by customs
DOC+220+CO5473’	Fourth order number CO5473
DTM+171:20011227:102'	Order date 27th of December 2001
STS+7::9+64+21'	Order has been cancelled
UNT+22+1'	Total number of segments in the message equals 22

6. Examples

Example 2

The following is an example of an Order Status Report message sent from a supplier identified by GLN 5411111123451 to a buyer identified by GLN 5412345123453. The order status enquiry was generated on the 15th of January 2002 and has the identity number OR6122. The message provides status information for two products which are contained on three separate orders.

The first line indicates that 500 units of the product identified by GTIN 4000862141404 were ordered on order number GF4144, order line number 12, dated the 31st of December 2001. On the 5th of January 2002 360 units were delivered leaving a backorder quantity of 140 which were despatched on the 14th of January 2002.

The second line on line number 32 of the same order reports that delivery of 90 units of the product identified by GTIN 5412345111184 has been delayed due to export restrictions. The third line details the product identified by GTIN 4000862141404, on line 1 of order number HA0014 dated the 2nd of January 2002. The status reported on this line is that the 40 units of the product ordered were delivered on the 4th of January 2002.

UNH+1+OSTRPT:D:01B:UN:EAN005'	Message header
BGM+348+OR6122+9'	Order status report number OR6122
DTM+137:20020115:102'	Message date 15th of January 2002
NAD+BY+5412345123453::9'	Buyer identified by GLN 5412345123453
NAD+SU+5411111123451::9'	Supplier identified by GLN 5411111123451
DOC+220+GF4144'	First order number for which a status report is being provided GF4144
DTM+137:20011231:102'	Order date 31st December 2001
LIN+1++4000862141404:SRV'	First product on order GF4144 is identified by GTIN 4000862141404
RFF+ON:GF4144:12'	Product is on line number 12 of order GF4144
STS+UP2::9'	Status of order
QTY+21:500'	Ordered quantity 500
STS+UP2::9+21'	Status of quantity is delivered
DTM+334:20020105:102'	Status date 5th January 2002
QTY+46:360'	Delivered quantity 360
STS+UP2::9+27'	Status of quantity is despatched
DTM+334:20020114:102'	Status date 14th January 2002 for despatched
QTY+83:140'	Backorder quantity 140
LIN+2++5412345111184:SRV'	Second product on order GF4144 is identified by GTIN 5412345111184
RFF+ON:GF4144:32'	Product is on line number 32 of order GF4144
STS+7::9+20+25'	Order delayed due to export restrictions
QTY+21:90'	Ordered quantity 90
DOC+220+HA0014'	Second order number for which a status report is being provided HA0014

6. Examples

DTM+171:20020102:102'	Order date is the 2nd of January 2002
LIN+3++4000862141404:SRV'	Second product on order HA0014 is identified by GTIN 4000862141404
RFF+ON:HA0014:1'	Product is on line number 1 of order HA0014
STS+7::9+21'	Order has been delivered
DTM+334:20020104:102'	Status date 4th of January 2002
QTY+46:40'	delivered quantity 40
UNT+29+1'	Total number of segments in the message equals 28

Note:
The EDI interchange will include the UNB..UNZ segments and, if applicable, the UNG..UNE segments. (See part 1 section 5.7).